10 Problem-Solving Router Bits

Tips & Techniques: Never-Fail Glueups

Now Showing on PBS Woodsmith Shop

Woodsmith®

www.woodsmith.com

Vol. 30 / No. 176

WhereWeShare.com

12 Top-Notch Band Saw Upgrades & Add-Ons

PLUS!

Mortises Made Easy: Simple Router Jig

Small Shop Solutions: No-Fuss Dust Pickup

Success Guaranteed: Cut Perfect Rabbets on Your Table Saw

A Publication of August Home Publishing

looking inside

Table of Contents

from our readers
Tips & Techniques 4

all about
Mallets in the Shop 8
There's more to this simple hand tool than you might think. Here's the scoop.

tools of the trade
Band Saw Upgrades & Add-Ons . . .10
Check out a dozen great ways to improve the performance of this versatile shop tool.

jigs and fixtures
Mortise Pal 14
This handy new jig takes mortising with a plunge router to a new level.

techniques from our shop ONLINE EXTRA video workshop
Rabbets on the Table Saw 16
Learn a few tricks and techniques that will make cutting perfect rabbets a sure thing.

tips from our shop
Shop Notebook 28

woodworking technique
Gluing Up Large Panels. 38
We'll show you how to get perfect results with the least amount of effort.

working with tools
10 Specialty Router Bits 40
You can find a router bit to fill just about any need. Take a look at some of our favorites.

small shop solutions
Dealing with Dust 44
Clear the air and make your shop a more pleasant place to work with these simple tips.

finishing room
Making Sense of Varnish. 46
Here's what you need to know to choose the right oil-based varnish for any project.

details of craftsmanship
Shaping Perfect Curves 48
Creating smooth, graceful contoured edges on your projects isn't hard. We share the secret.

in the mailbox
Q & A 50

hardware and supplies
Sources 51

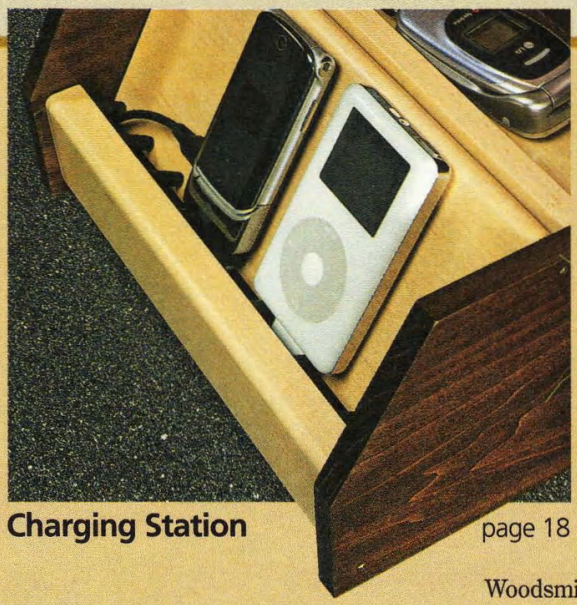

Charging Station page 18

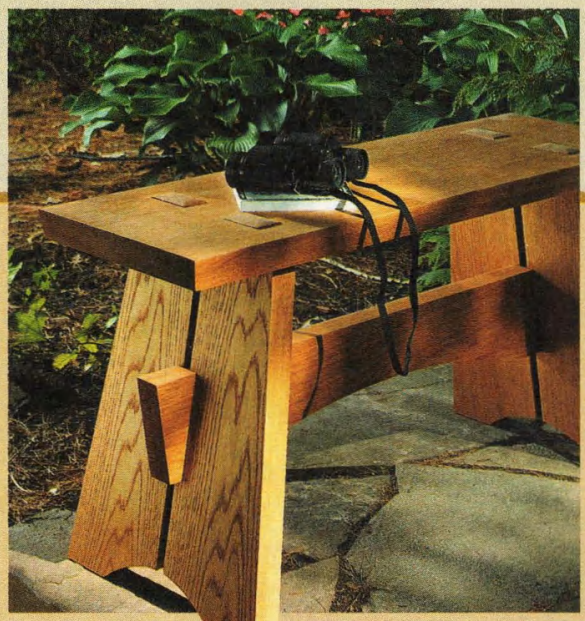

Garden Bench page 22

projects

weekend project

Charging Station 18

This small project fills a big need. Spend a couple of days in the shop and you'll be rewarded with a great way to keep your cell phone and other electronic gadgets charged and organized.

outdoor project

Garden Bench 22

The look of this simple garden bench couldn't be more inviting. But the most attractive part of this project might be the straightforward woodworking techniques used to build it.

heirloom project

Woodsmith GO ONLINE EXTRAS

Classic Oak Wine Server. 30

When you combine versatile storage, interesting woodworking, and a classic look in one project, you can't go wrong. This cabinet is sure to be as enjoyable to use as it is to build.

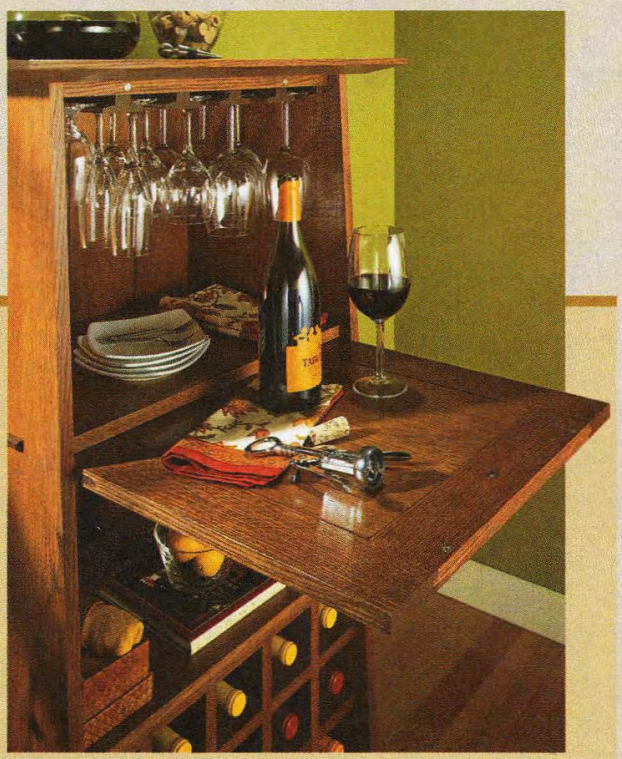

Wine Server page 30

editor's note

Sawdust

Over the last couple of issues I've been telling you about the *Woodsmith Shop* TV show. It's an all new woodworking show that focuses on different aspects of woodworking — from basic hands-on techniques like mortise and tenon joinery to what to look for when buying a new tool. Plus, you'll see plenty of tips and tricks you can put to use in your shop.

We started airing the show on public television just in Iowa. Then over the past few months, other public television stations around the country have been adding it to their 2008 schedule. Well, I'm happy to report that at this time the *Woodsmith Shop* is available to over 40% of the viewers in the country.

To be honest, the response has been much better than we had hoped for, especially in these first few months. I think the main reason is woodworkers like you have been writing, calling, and emailing their local PBS stations and asking about the show. It's really amazing to see what a few emails and letters can do — so I thank all of you for supporting us.

If you would like to find out if the show is going to be airing on your local PBS channel, go to **www.WoodsmithShop.com** and type in your zip code in the "when and where we're on" section.

One last thing. We're looking for a talented person to join our editorial team. This is a full-time position here in Des Moines, Iowa. If you're an experienced writer, have a strong interest in woodworking, and a desire to share your skills and knowledge with other woodworkers, I'd like to hear from you.

Just send a short resume highlighting your experience to: HR, August Home Publishing, 2200 Grand Avenue, Des Moines, IA 50312. Or you can visit our website at www.AugustHome.com for more information about this position.

Terry

ONLINE EXTRA video workshop

Woodsmith GO ONLINE EXTRAS

These two symbols let you know there's more information online at www.Woodsmith.com. There you'll see step-by-step videos, technique and project animation, bonus cutting diagrams, and a lot more.

Tips & Techniques

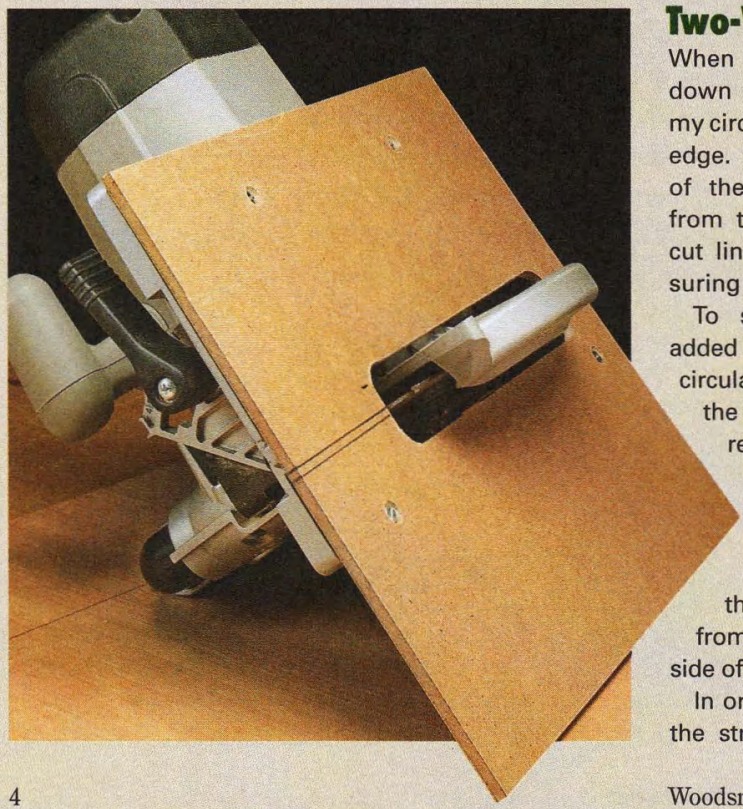

Two-Way Circular Saw Base

When it comes to breaking down sheet goods, I rely on my circular saw and a straightedge. But because the edges of the baseplate are offset from the blade, locating the cut line involves some measuring and a little guesswork.

To solve this problem, I added an auxiliary base to my circular saw, like you see in the photos. What makes it really handy is that the distance from the blade to the edge of the plate is the same on both sides. That means that I can start the cut from either end and either side of the straightedge.

In order to help me position the straightedge and line up the cut, I marked the kerf line on the front and back edges of the base. You can see how this works in the photo above.

I made the base from ¼" hardboard. To determine the width, measure the distance from the blade to the edge of the widest part of your saw's base. Double this number and add the thickness of the blade. The length is the same length as your saw's base. You'll need to make a cutout so the blade guard can operate freely, as shown in the photo at left.

To attach the base, you can drill and tap for screws like I did. Or a few strips of double-sided tape work great, too.

George Johnson
Canora, Saskatchewan

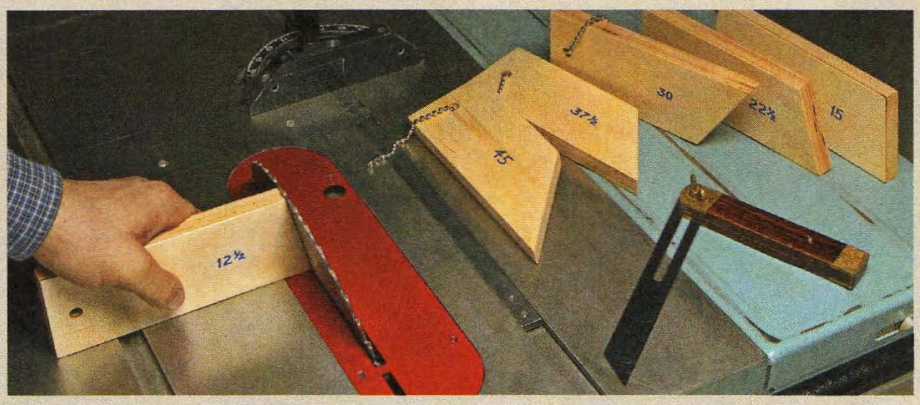

Angle Blocks Speed Setup

I used to rely on my bevel gauge to lay out angles and set up my table saw for angled cuts. But even a little bump to the gauge can cause it to lose its setting. The answer is in the angled set-up blocks you see pictured above.

After setting the angle on the bevel gauge, I set my miter gauge to that angle and cut a small block from a scrap piece of plywood. Then, if I need to reproduce that angle, I've got a set-up block at hand. I keep a collection of blocks that are cut to standard angles for a variety of miter joints and even dovetails.

Peter Kasper
Tiffin, Iowa

Forstner Bit Clears Waste

Drilling large holes for things like clock movements can be a challenge. Forstner bits in these large diameters can be pretty expensive.

So I came up with a two-step procedure to make large, flat-bottom holes. First, use a circle cutter or hole saw to cut the edge of the recess to the desired depth. Then I follow up with a smaller Forstner bit. Just drill overlapping holes to clean out the waste, as you see in the photo on the left. You're left with a nice, clean hole without a lot of effort.

Steve Swanson
Monroe, Virginia

SUBMIT YOUR TIPS

If you have an original shop tip, we would like to hear from you and consider publishing your tip in one or more of our publications. Just go to our web site at *www.Woodsmith.com* and click on the link, "SUBMIT A TIP." Or you can mail your tip to:

Woodsmith Tips and Techniques
2200 Grand Avenue
Des Moines, IA 50312

Please include your name, address, and daytime phone number in case we have any questions. We will pay up to $200 if we publish your tip.

FREE TIPS BY EMAIL

Now you can have the best, time-saving secrets, solutions, and techniques sent directly to your email inbox. Just go to **www.Woodsmith.com** and click on ***"Sign Up for Free E-Tips."*** You'll receive one of our favorite tips each week.

Woodsmith

No. 176 April/May 2008

PUBLISHER Donald B. Peschke

EDITOR Terry J. Strohman

MANAGING EDITOR Vincent Ancona
SENIOR EDITOR Ted Raife
ASSISTANT EDITORS Randall A. Maxey, Dennis Perkins, Carol Beronich
CONTRIBUTING EDITORS Bryan Nelson, Phil Huber
EDITORIAL INTERN Catherine Seiser

EXECUTIVE ART DIRECTOR Todd Lambrith
SENIOR ILLUSTRATORS David Kreyling, Dirk Ver Steeg, Harlan V. Clark, Peter J. Larson, David Kallemyn
SENIOR GRAPHIC DESIGNER Bob Zimmerman
GRAPHIC DESIGNER Shelley Cronin

CREATIVE DIRECTOR Ted Kralicek
SENIOR PROJECT DESIGNERS Ken Munkel, Kent Welsh, Chris Fitch, Jim Downing
PROJECT DESIGNERS/BUILDERS Mike Donovan, John Doyle
SHOP CRAFTSMEN Steve Curtis, Steve Johnson
SR. PHOTOGRAPHERS Crayola England, Dennis Kennedy
ASSOCIATE STYLE DIRECTOR Rebecca Cunningham
ELECTRONIC IMAGE SPECIALIST Allan Ruhnke
VIDEOGRAPHER Mark Hayes

Woodsmith® (ISSN 0164-4114) is published bimonthly (Feb., Apr., June, Aug., Oct., Dec.) by August Home Publishing Company, 2200 Grand Ave, Des Moines, IA 50312.
Woodsmith® is a registered trademark of August Home Publishing.
Copyright© 2008 August Home Publishing Company. All rights reserved.
Subscriptions: Single copy: $4.95. One year subscription (6 issues), $24.95. (Canada/International add $10 per year, U.S. funds.)
Canadian Subscriptions: Canada Post Agreement No. 40038201. Send change of address information to PO Box 881, Station Main, Markham, ON L3P 8M6. Canada BN 84597 5473 RT
Periodicals Postage Paid at Des Moines, IA, and at additional offices.
Postmaster: Send change of address to *Woodsmith*, Box 37112, Boone, IA 50037-2112.

www.Woodsmith.com

ONLINE SUBSCRIBER SERVICES

- **VIEW** your account information
- **RENEW** your subscription
- **CHECK** on a subscription payment
- **PAY** your bill
- **CHANGE** your mailing or e-mail address
- **VIEW/RENEW** your gift subscriptions
- **TELL US** if you've missed an issue

Click on the link, "MAGAZINE CUSTOMER SERVICE" in the list on the left side of our home page. Menus and forms will take you through any of the account maintenance services you need.

CUSTOMER SERVICE **Phone: 800-333-5075**

SUBSCRIPTIONS
Customer Service
P.O. Box 842
Des Moines, IA 50304-9961
subscriptions@augusthome.com

EDITORIAL
Woodsmith Magazine
2200 Grand Avenue
Des Moines, IA 50312
woodsmith@woodsmith.com

AUGUST HOME PUBLISHING COMPANY

Printed in U.S.A.

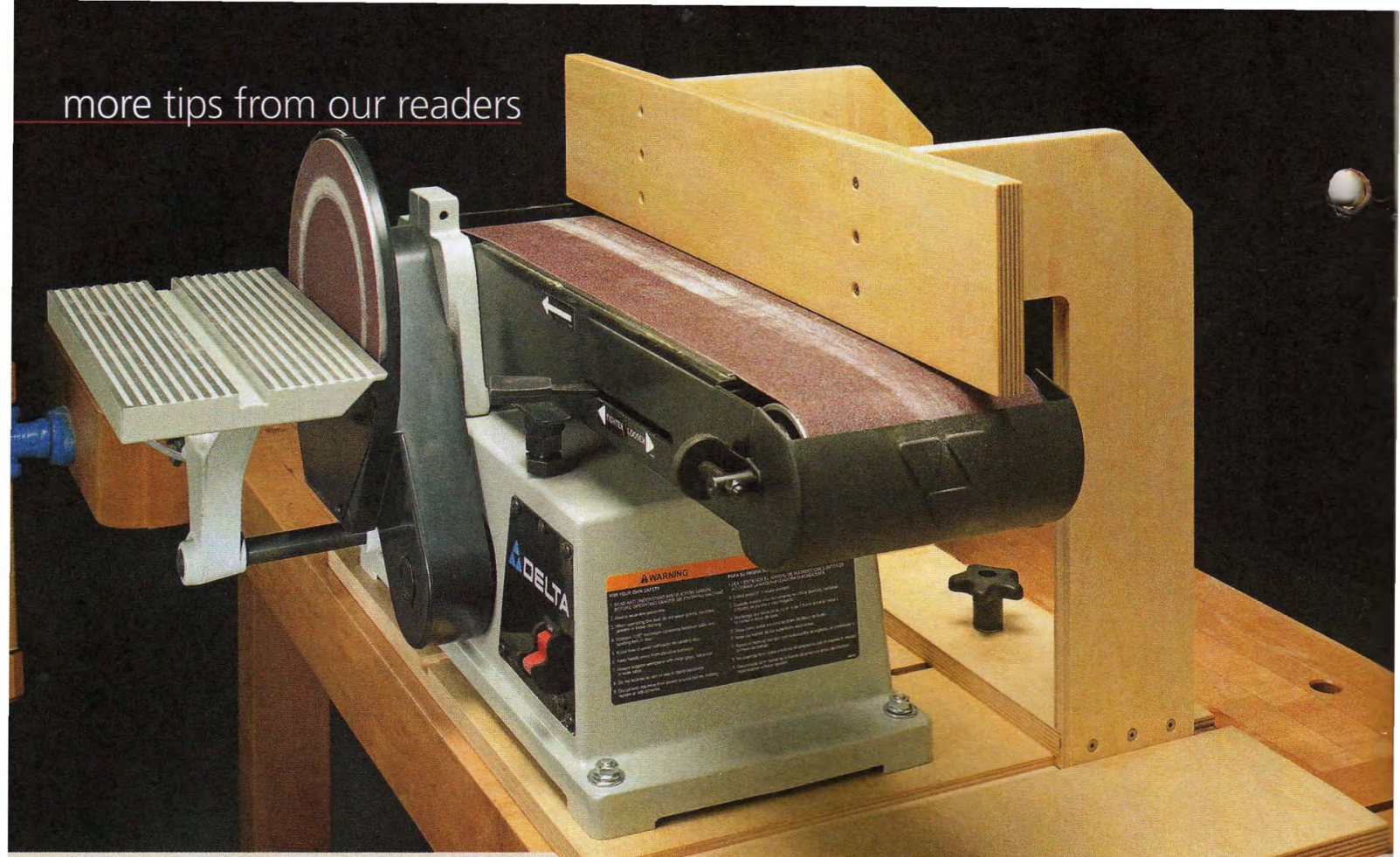

Belt Sander Fence

I have a small, benchtop belt and disk sander. It works great, but sanding a square edge on a workpiece is difficult.

To remedy this problem, I built the sander fence you see here. It's simple, accurate, and the fence can be adjusted for even wear on the belt.

The jig is made entirely of ¾" plywood. The drawings below show you how it goes together. NOTE: You may have to adjust some dimensions to fit your sander.

You can see in the drawing that the base has two dadoes and slot for the sliding fence assembly. The uprights slide in the dadoes to adjust the fence.

The uprights are held together at the bottom by an adjustment plate (detail 'a'). A hole in the plate is for the adjustment bolt and knob.

The fence is attached to the uprights with a few screws. Here I took some extra care to make sure it was square to the belt all along its length. (You might have to use shims to square it up.)

Now, sanding a square edge on a workpiece isn't such a challenge.

Gerald Creager
Rushville, Indiana

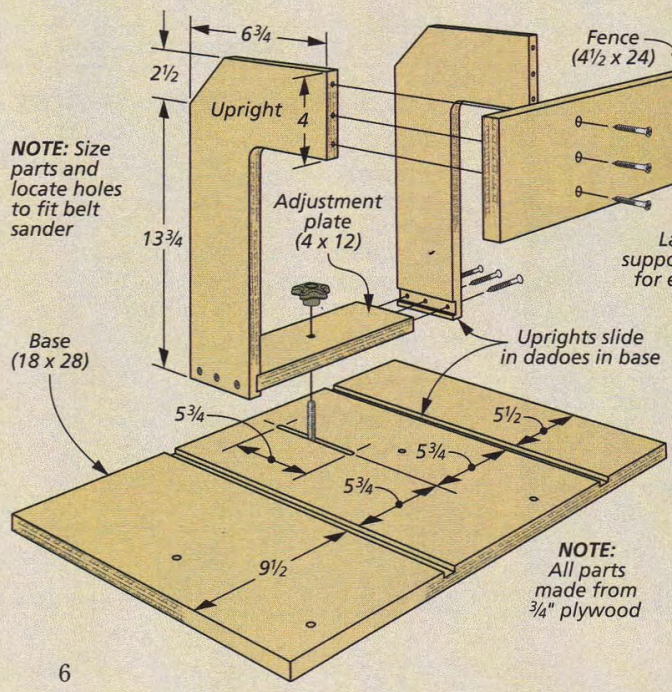

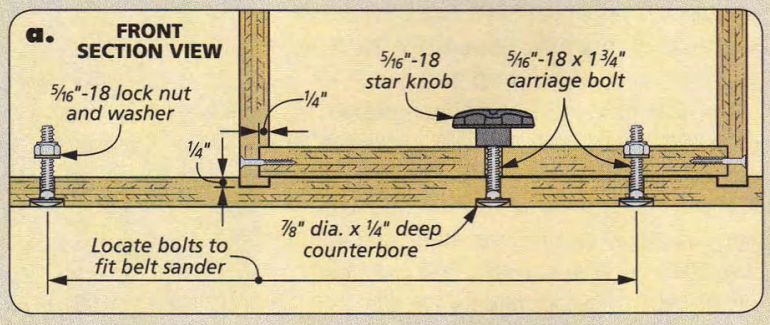

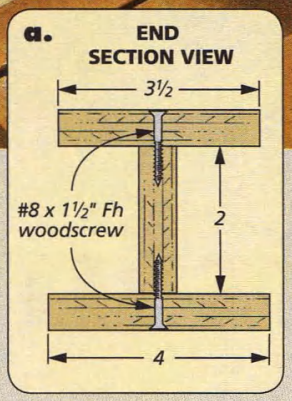

Benchtop Sawhorses

There are often times when I need to rout or cut through the thickness of a workpiece. To protect my benchtop, I made a few of the "sawhorses" you see above. They clamp easily to my bench and store out of the way when I'm ready to close up shop at the end of the day.

These sawhorses are easy to make from strips of ¾" plywood, as shown in the detail drawing at right. The top and bottom plates provide space for clamping the sawhorse to the bench and the workpiece to the sawhorse.

These are also perfect for raising the workpiece to cut with a circular saw or jigsaw. And they're great during assembly and glueup. (A coat of wax keeps the glue from sticking to them.) I made a few different lengths to have on hand for any project.

Serge Duclos
Delson, Québec

Quick Tips

BENCH-MOUNTED CLIPBOARD CLIPS

I use butcher or kraft paper to cover my workbench, keeping glue and other drips off the benchtop. The paper comes from a big roll mounted under one end of the bench. To keep the paper under control, I added two clips to the other end of the bench. The clips came from old clipboards. You can simply fasten the clips with screws at the opposite end of the bench just below the benchtop.

Thomas O'Brien
San Antonio, Texas

RECYCLED PLASTIC BAGS

Two woodworkers from Ontario, **Charlie Wendell** of Nepean and **David B. Johnson** of Mount Hope, found a great way to reuse plastic grocery and cereal bags. They're great for protecting clamps and projects from glue squeezeout. Cut the bags along the seams to cover a large area, or into smaller pieces as needed.

NEW TOOL CLEANUP

After purchasing a new spindle sander, I used a safety razor scraper (from the hardware store) to scrape the protective coating off of the cast iron top. After a final wipe with mineral spirits then a coat or two of paste wax, it was ready to go in no time at all.

Paul Cottingham
League City, Texas

Win This Porter-Cable Variable Speed Router

That's right, send us your favorite shop tips. If your tip or technique is selected as the featured reader's tip, you'll win a *Porter-Cable* variable speed router just like the one shown here. To submit your tip or technique, just go online to *www.Woodsmith.com* and click on the link, "SUBMIT A TIP." You can submit your tip and upload your photos for consideration.

The Winner!

Congratulations to *Gerald Creager* of Rushville, Indiana! His belt sander fence (opposite page) was selected as the winner of the *Porter-Cable* router seen here. A few pieces of plywood turn an ordinary benchtop belt sander into an accurate edge sander.

To find out how you could win a *Porter-Cable* variable-speed router, check out the information on the left.

traditional hand tools

Mallets in the Shop

Discover what these classic, hard-hitting hand tools can do for you and why they deserve a place in your shop.

These older mallets are made of lignum vitae, a dense and heavy hardwood.

If I had to make a list of "essential" woodworking tools, there's no doubt that a mallet would be near the top of the list. And yet, mallets often get overlooked for other, more flashy tools — chisels, hand planes, squares, and even saws. But without a doubt, mallets are every bit as important.

NOT FOR NAILS. Mallets are often mistakenly seen as some type of primitive hammer. But this common misconception is far from the truth. Hammers are for driving nails, but mallets are for striking wood-handled tools or knocking parts of a project together. That's why mallets are traditionally made of wood, so they won't damage the tool or project you're working on. (See the lignum vitae mallets shown at left.)

Mallets are also one of those generic tools used by many different trades. This is why you'll find them in a wide variety of shapes, sizes, and materials. But for woodworking, there are a couple of distinct mallet styles I like to have in my shop — the cabinetmaker's mallet and the carver's mallet. I find both types to be useful.

CABINETMAKER'S MALLET

The mallet you'll most often see in a woodworking shop is usually referred to as a cabinetmaker's mallet. This is the type of mallet shown in the photo above. I use a cabinetmaker's mallet all the time in my shop, not only for striking chisels, but for "persuading" stubborn joints during assembly.

At first glance, the cabinetmaker's mallet looks like nothing more than a rectangular block of wood on a handle. But this is one of those tools that's deceptively simple.

If you take a closer look at the head of a cabinetmaker's mallet, you'll notice that the grain runs lengthwise, so that the striking

faces of the mallets are tough, long-lasting end grain. These faces are usually beveled between 5° and 10°. The reason for this can be seen in the drawings at right. Since your arm swings the mallet in an arc, the beveled face allows you to deliver a square blow without having to bend your wrist unnaturally, preventing fatigue.

HANDLE. You'll also notice that the handle of most cabinetmaker's mallets are tapered to fit into a matching tapered hole in the head of the mallet. This way, as you swing the mallet, centrifugal force causes the head of the mallet to wedge itself tightly to the handle.

Cabinetmaker's mallets are generally made out of a heavy, dense hardwood. In the past, lignum vitae was a popular choice because of its density. Today, beech and maple are commonly used woods.

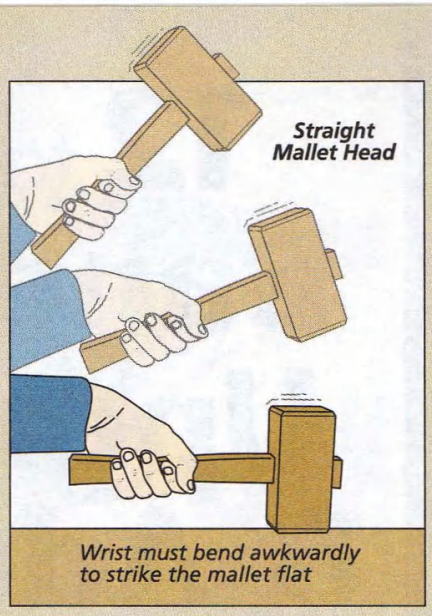

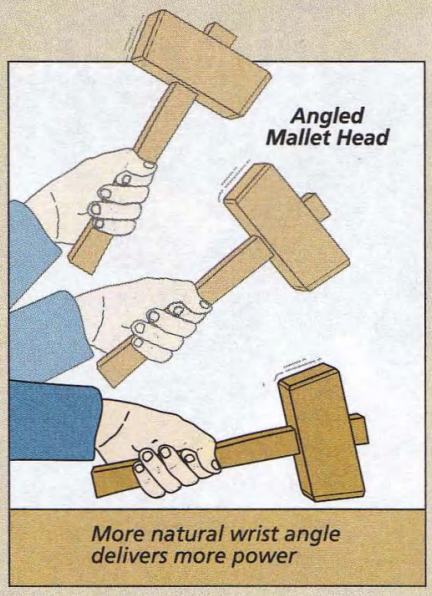

▲ The round shape of a carver's mallet allows you to grasp the tool in any orientation.

Cabinetmaker's mallets are sold in different sizes and I find it useful to have couple of different ones on hand. (See page 51 for Sources.)

CARVER'S MALLET

Another style of mallet you're likely to encounter is a carver's mallet (see photo at left). A carver's mallet is round, and its shape serves an important purpose. Using a round mallet allows you to strike the carving chisel without having to pay attention to the orientation of the head of the mallet. This way you can focus your attention on the cutting end of the tool.

Carver's mallets can either be turned out of a single piece of hardwood or made in two pieces, with the handle fitting into a hole in the head of the mallet and secured by a wedge. Like cabinetmaker's mallets, carver's mallets are available in different sizes. And this is a case where bigger isn't always better. If you're using a carver's mallet for a long stretch at a time, you may want to select a lighter mallet to avoid arm fatigue.

Carver's mallets are perfect for short, contolled taps on a carving chisel, they aren't really suited for heavy blows (chopping mortises, for example). The round shape of the head makes it too easy for the mallet to glance off the handle of the tool you're striking. That's why I find it beneficial to own both styles of mallet.

Fortunately, one of the nice things about mallets is that they're simple enough to make, which means that you can afford to own more than one. And for some other mallet choices, see the box below.

Special-Purpose Mallets

Wood is the traditional material for mallets—but not the only choice. There are a number of mallets made out of other materials that are worth a closer look (photo at right).

DEAD-BLOW MALLET. One mallet that I wouldn't want to be without is a dead-blow mallet. The head of this type of mallet is weighted. Then the entire mallet is covered in plastic or rubber so that it won't damage the object you are striking. The combination of dense weight and the soft covering prevents the mallet from bouncing off an object when you use it. It's a great choice for assembly tasks.

BRASS MALLET. When working in tight spaces, a brass mallet is useful. Although it's small in size, the heavy brass head of this mallet gives it plenty of authority. And you can use this mallet with short swings, giving you much better control.

URETHANE MALLET. For carving, here's an updated version of the traditional wood carver's mallet. This mallet has the same round shape of a carver's mallet, but the head is covered with a tough, resilient layer of urethane. The urethane is gentler on wood tool handles and doesn't recoil with every blow.

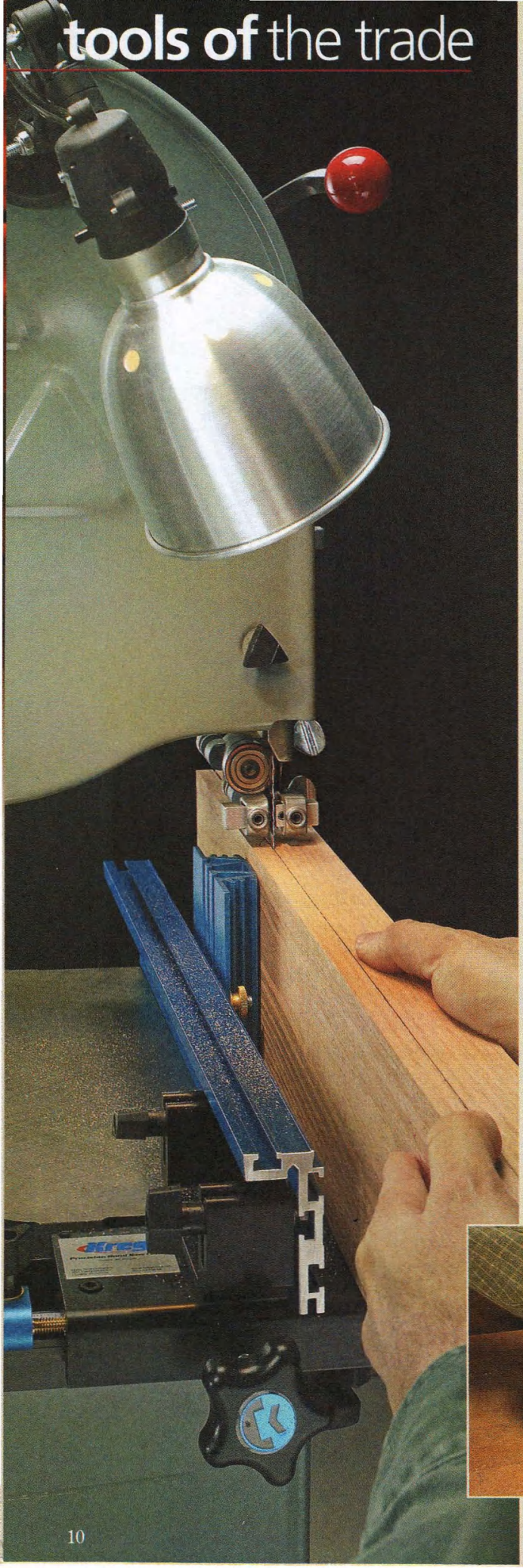

12 top-notch Band Saw Upgrades & Add-Ons

Take a look at some great ways to make this essential tool work harder and better.

Whether you need to cut a curve on a workpiece, resaw stock, or just make a quick, accurate cut, there's often no better tool for the job than the band saw. It's without a doubt one of the most versatile performers in the shop. So maybe this trusty old tool deserves more respect and attention than we give it.

What I'm suggesting is pretty simple. Just make certain that your band saw is in top working order and always up to any task you ask of it. And a simple way to do this is to outfit your saw with some of the aftermarket upgrades and accessories that are available.

With a few exceptions, these items are all pretty inexpensive and the payback period is short. Your band saw will run smoother and quieter, make cuts easier and better, and probably even tackle some new chores. You'll find all the source information on page 51.

1 URETHANE TIRES. The original equipment tires installed on your band saw wheels are most likely rubber. They work fine until the rubber dries out, cracks, loses it's elasticity, and starts to slip on the wheel. At this point, the blade probably won't track right and you need to find a fix.

My suggestion is that you upgrade to urethane tires, as shown in the photo below. Urethane tires have several advantages over rubber. Unlike rubber tires on some band saws, they don't need to be glued to the wheel, so installation is a snap. You simply stretch the tire over the wheel, reinstall it, and you can get back to work.

Once the tire is in place, you can forget about it. Urethane tires hold up much better under load and can last as much as five times longer than a rubber tire. For the cost (14" tire, $25), you can't beat them.

2 WHEEL BRUSH. Installing a wheel brush on your saw is an easy and cost-effective way to ensure trouble-free operation. The concept is shown in the photo at right. As the wheel turns, the brush gently "dusts" the lower tire, keeping the chips and sawdust from building up on the tire. The blade tracks better and the tire will last longer. Only $6 to $8.

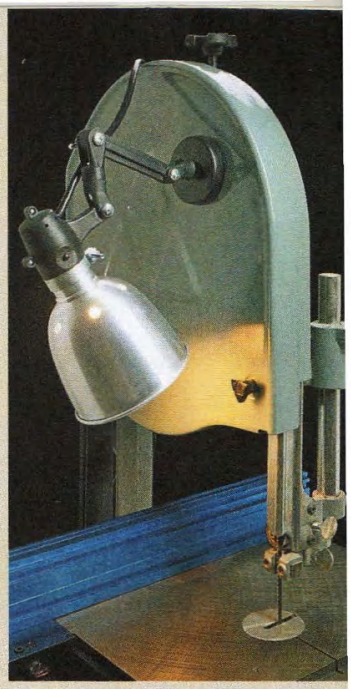

3 SWIVEL LIGHT. For me, one of the best ways to improve the quality of my cuts is to shine some light directly on the subject. A versatile work light, like the one shown at right, fills this bill nicely.

This light has two nice features. The first is a strong magnetic clamp that allows you to quickly attach it to the band saw cabinet. Then you can use the multiple swivel points to direct the light right where it's needed. For $30, you can't go wrong.

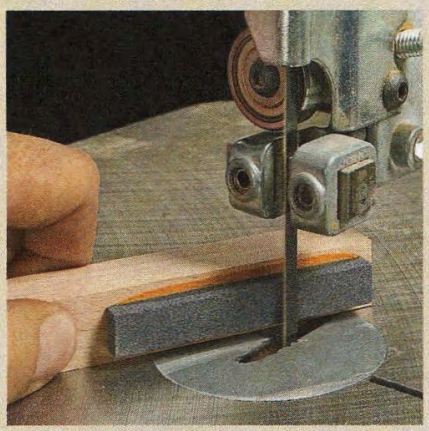

4 TUNING STONE. Dressing a blade with a tuning stone allows you to cut tighter and smoother curves. The idea is simple. With the saw running, you hold the tuning stone against the back of the blade to round over the sharp edges (left photo). As shown in the drawings below, the rounded edge won't drag in the kerf, scoring and burning the cut. About $13.

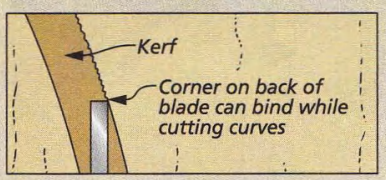

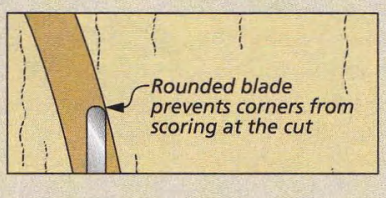

5 LINK BELT. Vibration is the enemy of smooth cuts. A good way to reduce vibration and improve the quality of your band saw's cut is to replace the stock drive belt with a link belt (right photo).

A link belt very effectively dampens vibration from the saw's motor. In addition, a link belt will hold up much better than a stock belt. You'll pay $7 to $8 per foot.

Guide Block Upgrades

6 TWO GOOD OPTIONS. There are a couple of inexpensive, aftermarket guide block upgrades that offer improved performance for this all-important part of your band saw.

Cool Blocks (left photo) are made from a self-lubricating, non-metallic material. As the name implies, they provide firm support for the blade without generating friction or heat. Your blades will run quieter and last longer. A good deal at about $14.

The *Spaceage Ceramic Guideblocks* in the right photo offer improved performance with a different twist. These blocks are made from a wearproof ceramic material. They reduce friction and run quieter while removing resin buildup from the blade. For $20 you get a lifetime guarantee.

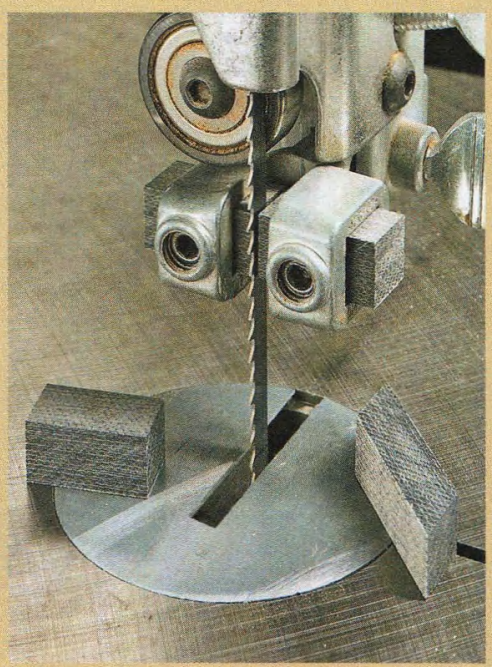

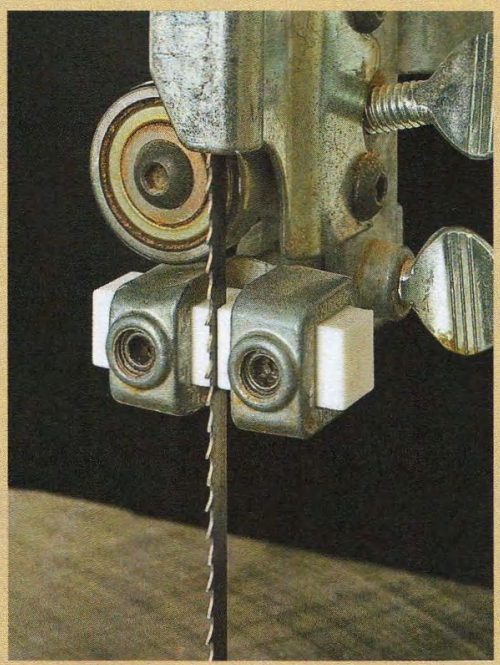

7 BANDROLLERS. If you'd like to take a step up from stationary guide blocks, the easy-to-install ball bearing *Bandrollers*, shown below, are a good option. Virtually frictionless and wearproof, these guides provide snug blade support for better cuts and longer life. At $75, a sound purchase.

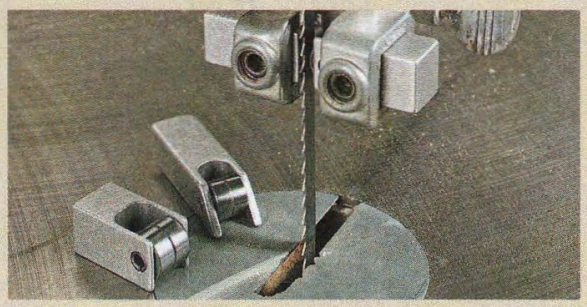

8 ROLLER GUIDE SYSTEM. Some band saws see more use than others. If you rely on your saw as a do-everything, all-the-time tool, an upgrade to the *Carter Roller Guide Conversion Kit* might serve you well. This system replaces both the upper and lower guide units of your saw with the heavy-duty, ball bearing guide assemblies shown in the photo at right.

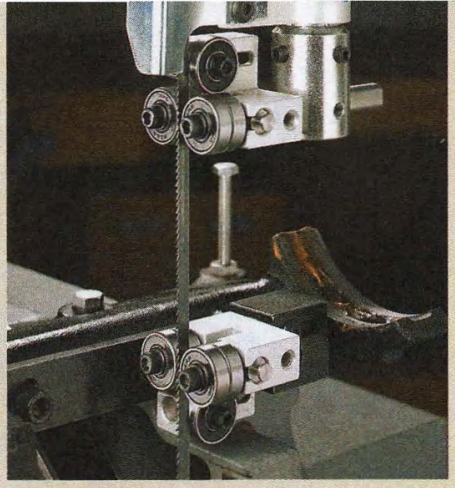

Ball bearing guides can be snugged up tight to the blade to provide more rigid support than standard stationary guides. The advantage is much less flex and twist in the blade while making tough cuts. You'll be able to follow a curved or straight line with dead-on accuracy. A conversion kit will run in the $150 range, but give you a lifetime of service.

9 A NARROW BLADE STABILIZER. A band saw is designed for and excels at cutting curves in wood. And if you use your saw to do a lot of fine scroll work, the *Carter Stabilizer*, shown at right, might be a good investment.

The stabilizer is designed for use with ⅛" to ¼"-wide blades. It uses a unique approach to keep these narrow blades on track. The stabilizer replaces the rigid, three-sided support of the standard guide system with a grooved, bearing-mounted, metal wheel.

The blade rides in the groove in the wheel and is prevented from moving backward or side to side. But it can twist slightly as you follow a curve. The upshot is that this flexible support allows you to cut tighter, smoother, and burn-free curves. For $75 your band saw can take on the roll of a scroll saw.

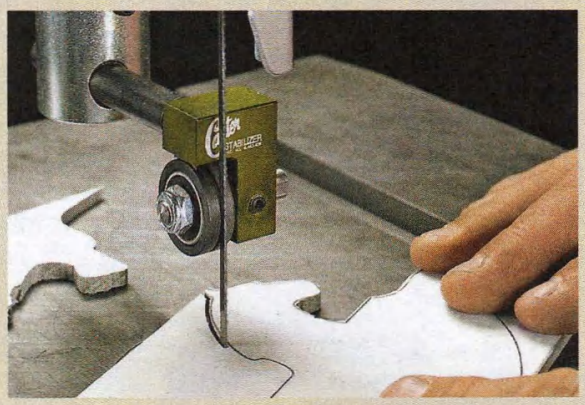

10 QUICK-RELEASE TENSIONER. If you change blades often or always release the tension on the blade when the band saw is not in use, the *Carter Quick-Release Tensioner* should be high on your wish list. No more cramped hands from endlessly turning the tension knob. The quick-release tensioner allows you to release and then reapply precise blade tension with the flip of a lever, as shown at left.

In addition to full release and full tension, a mid-tension setting makes blade changes much easier. You'll have no reason to put off a necessary blade change and you can make the blades, tires, bearings, and tension spring last longer. The tensioner will fit most 14" band saws and even at around $160, is well worth the cost.

11 HIGH-TENSION SPRING. For accurate cuts, proper blade tension is essential. If the tension isn't up to specs, the blade can flex and start to wander in the cut.

The stock tension spring on your saw can weaken over time and may not be able to deliver the necessary tension, especially when using wider blades for resawing. Replacing it with a high-tension spring (yellow spring below) will guarantee proper tension for any width blade or cutting operation. About $20.

12 KREG PRECISION FENCE. I'll admit that I never considered a high-quality band saw fence a necessity. But a little time spent using the *Kreg Precision Band Saw Fence* changed my attitude.

EASY MOUNT. As with all of *Kreg's* offerings, their band saw fence is well thought out and well made. The photo at right shows the basic fence package. What immediately impressed me was how easy it is to assemble and install the fence . The mounting rail simply bolts in place using the existing threaded holes in the saw's table. The rail is pre-drilled to fit a variety of common band saw brands.

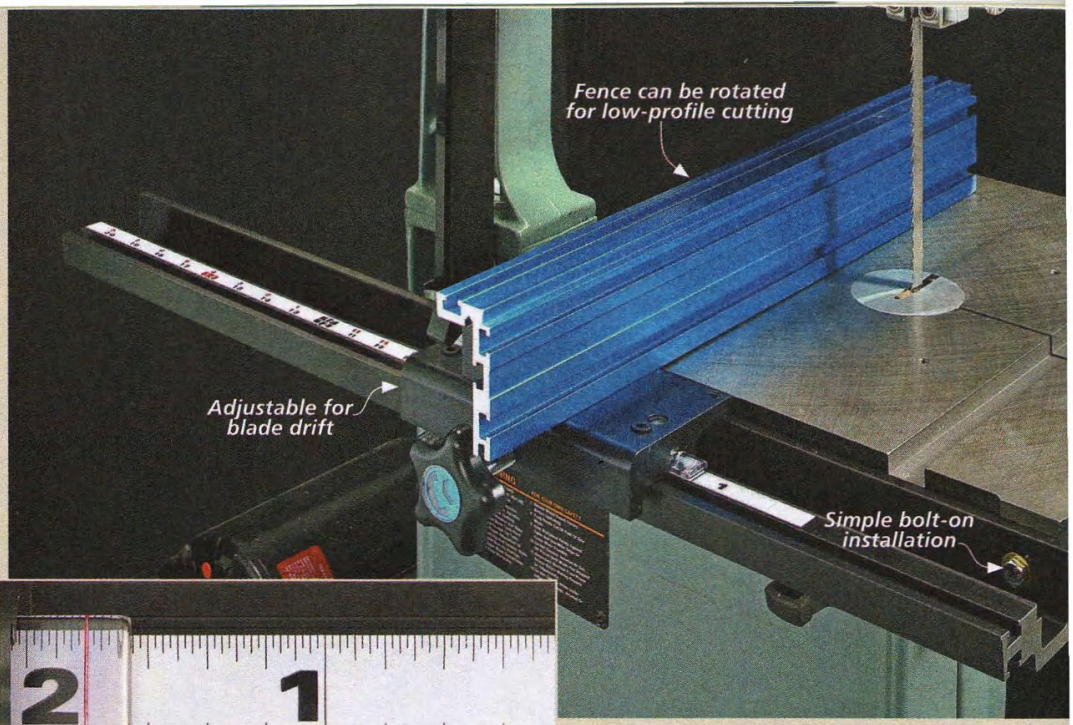

You can keep the ruler in your pocket. The tape and lens cursor make for quick fence adjustments.

VERSATILE ADJUSTMENT. Once the fence is installed, you can begin to explore the range of easy-to-make adjustments. The fence is mounted to a clamping block that slides effortlessly along the rail and is locked down with a "finger-friendly" knob. It can be positioned on either side of the blade. A tape and cursor allow fast, accurate adjustment (inset photo).

Next, a pair of easily accessible nylon set screws allow you to align the fence perfectly parallel to the blade. The fence can also adjusted side-to-side by simply loosening a pair of T-knobs and sliding it along its mounting bracket.

If blade drift is a problem, there's a simple solution. The fence mount can be pivoted on the clamping block to either align it parallel to the blade or adjust for drift.

Finally, when cutting thin stock, the L-shaped fence can be remounted in a low profile configuration. This allows you to lower the guides for better blade stability. You get a lot of fence for $110. W

Inexpensive Add-Ons

Kreg also offers a couple of low-dollar add-ons for their band saw fence that are definititely worth a look.

PRECISION MICRO-ADJUSTER. If you add the *Kreg Micro-Adjuster*, shown below, you won't have to rely on the "gentle nudge" technique of fence positioning. It works pretty slick. As you can see, the adjuster rides on the mounting rail and is connected to the clamping block by a threaded rod. You lock down the adjuster, unlock the fence, and then turn the dial to make adjustments as fine as .005". Not bad for $15.

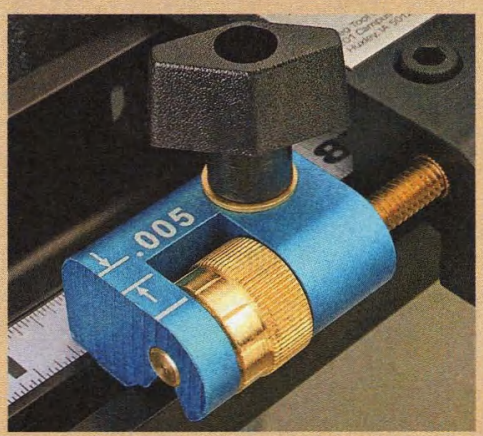

To make a precise adjustment, you simply lock down the adjuster, unlock the fence, and dial in the position.

RESAW GUIDE. Without a reliable way to guide and steady the workpiece, accurate resawing can be hit or miss. The *Kreg Resaw Guide* (right photo) eliminates this uncertainty.

As you can see, the guide face is curved. This allows you to adjust your feed for blade drift and accurately follow a layout line. It's available in a 4½" and 7" height. ($18 to $20)

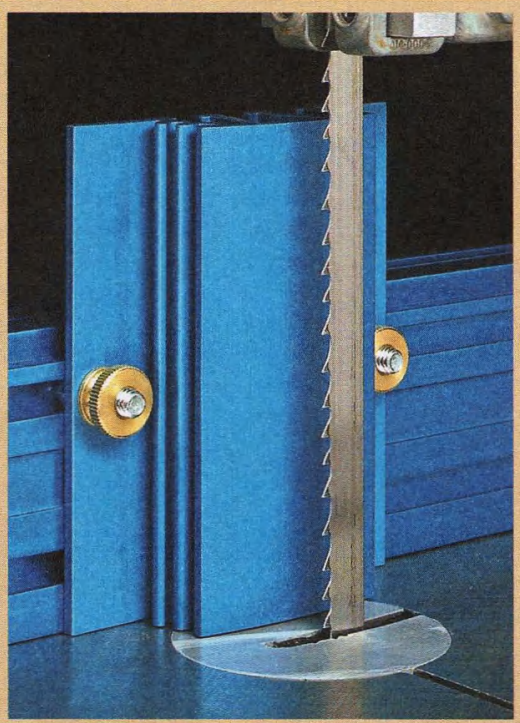

The *Kreg* resaw guide mounts easily to the fence. Its curved face allows you to steer the workpiece to track a line.

quick, accurate mortises with the

Mortise Pal

This new precision jig makes routing clean mortises with a plunge router virtually foolproof.

A plunge router can cut a clean slot mortise in the blink of an eye. The only catch is you need an easy to set up and reliable way to guide your router and accurately position the mortise in the workpiece. Without a foolproof jig, routing mortises isn't always an attractive option.

If you've been searching for a solution to this problem, look no more. The makers of the *Mortise Pal* mortising jig have designed an easy-to-use jig that can have you set up and routing dead-on accurate mortises in a snap. No guesswork or tricky adjustments required.

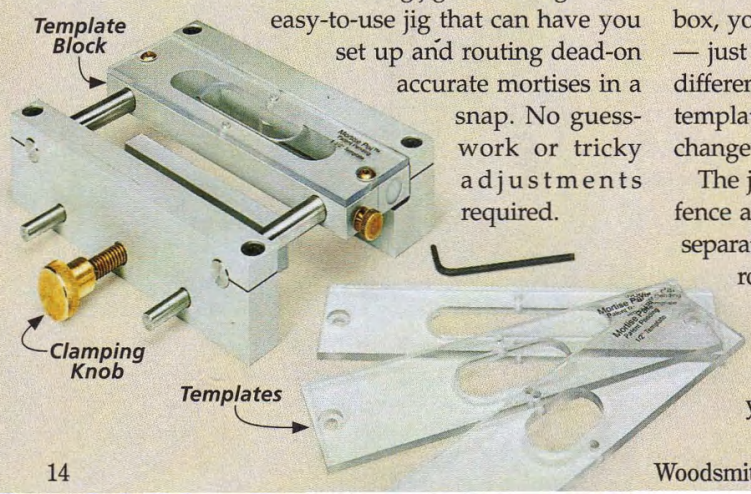

▼ The compact *Mortise Pal* offers easy, accurate, and versatile performance.

VERY SIMPLE. The *Mortise Pal* reminds me of a doweling jig and works somewhat the same. The compact anodized aluminum body is clamped over the edge of the workpiece. The mortise is then routed with the aid of a guide bushing on the router baseplate that mates with a template installed on the jig. It's just as simple and easy to use as it sounds.

THE DETAILS. When you open the box, you won't find a lot of parts — just the jig body, a set of four different, interchangeable acrylic templates, and an Allen wrench to change them (photo at left).

The jig body consists of a fixed fence and a fixed clamping block separated by a pair of stainless steel rods. Suspended between the two rods is the adjustable template block. It slides along the rods allowing you to position the mortise across the width of the workpiece. You'll be impressed by the precise fit and finish and smooth operation of the *Mortise Pal.*

The slotted templates are labeled ½", 1", 1½", and 2", but this needs some explanation. The length of the mortise that each template will produce is actually determined by the diameter of the bit you use. The formula is simple and works like this: The template size plus the bit diameter equals the mortise length. For example, a ⅜"-dia. bit used with the 1" template will create a 1⅜"-long mortise. You can make a mortise not covered by one of the template sizes by using the next smaller size template and then routing two overlapping mortises.

YOUR CONTRIBUTION. To use the jig, you need to provide three things. The first is a small plunge router with a base about 6" in diameter. The small bearing surface of the

jig would make controlling a large router difficult. But I had no trouble using a light-duty router and it easily handled the task.

You'll also need a 5/8"-O.D. guide bushing for the router baseplate. But not just any bushing will work. For proper clearance, the guide bushing can't be more than 3/8" long and for accuracy, it should be perfectly centered over the router spindle. The makers recommend a bushing installed with the aid of a centering pin, like the one below.

Finally, you'll need a bit (or bits). Spiral flute upcut bits are designed for plunge cuts and are your best choice for mortising.

EASY TO USE. The mark of a well thought out jig is its function. This includes both the ease of use and the end result. On both scores, the *Mortise Pal* rates high. The setup is quick, straightforward, and easy to master. And once that's done, routing a clean, accurate mortise is a given.

▲ You'll need a spiral flute upcut bit and a guide bushing with a centering pin.

LAYOUT & SETUP. The box below shows the simple, three-step setup of the jig. All you need to do to lay out the mortise is draw crosshairs on the workpiece that mark the center point of the width and length. Then with the correct template installed in the template block, you position the jig using the engraved line on either end of the block and a set of pointers in the opening. It only takes a minute and accurate positioning of the mortise is virtually guaranteed.

ROUTING A MORTISE. After positioning the jig, routing the mortise is pretty straightforward, but there are a couple of quirks to mention. Rather than simply plunge and rout, you start the mortise by "drilling" a series of full-depth overlapping holes with plunge cuts. Right away you'll discover that the chips removed by the bit have no way to escape. They build up in the template opening and can clog the template. This is noted in the manual and the solution is to simply stop and vacuum or blow them out.

Once the mortise is roughed out, you clean it up with a continuous, full-depth pass around the perimeter of the template. The width of the template opening is actually 1/64" wider than the 5/8" diameter bushing. The reasoning here is that this allows you to make a cleanup pass, resulting in a mortise with perfectly smooth sides. It works well and the drawback of a mortise that's 1/64" overwidth is pretty minor.

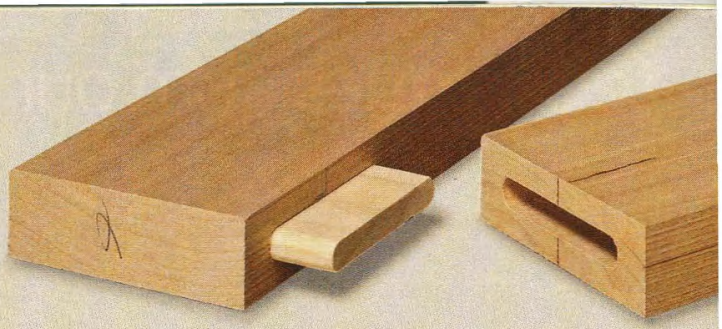

▲ The *Mortise Pal* makes perfectly aligned loose tenon joinery a breeze.

WHAT IT CAN DO. The *Mortise Pal* doesn't have many limitations. Single, double and twin mortises for standard mortise and tenon joinery are routine. It really shines at loose tenon joinery, as shown in the photo above. It will handle mortises up to 1/2" wide and can accommodate stock up to 2" thick. The mortise depth is limited only by the length of your router bit. (You lose about 5/8" due to the thickness of the template and block.)

THE BOTTOM LINE. You may be wondering just what all this precision and convenience is going to cost. At just under $200, the *Mortise Pal* certainly isn't a casual purchase (see Sources). But when you weigh the price against the benefit, the *Mortise Pal* is a tool that will pay for itself pretty quickly. W

How-To: Quick, Easy Layout and Setup

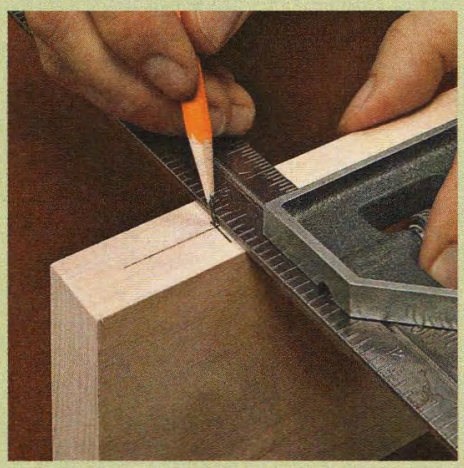

Centerlines. *The layout consists of a pair of intersecting lines marking the centerpoints of the mortise's width and length.*

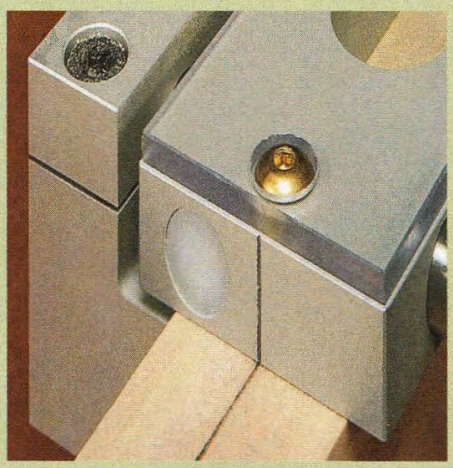

Side to Side. *First you position the mortise side-to-side by aligning the engraved mark with the marked centerline.*

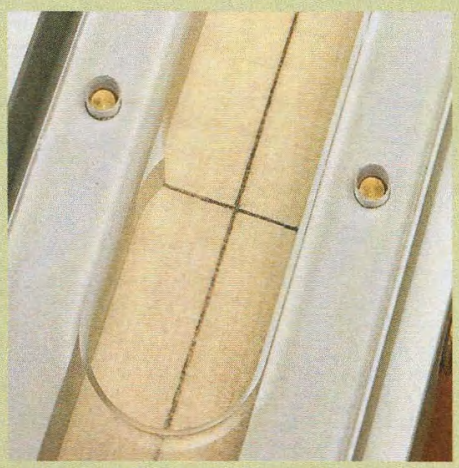

On Point. *Then, the pointers in the template block opening allow you to easily center the length of the mortise.*

Rabbets on the table saw

Woodsmith GO ONLINE EXTRAS

To view a video demonstration of cutting rabbets on the table saw, visit our website at Woodsmith.com.

Cutting this versatile joint on the table saw allows you to dial in perfect results quickly and easily every time.

There aren't too many projects that don't use rabbets for one purpose or another. You'll find them used to create an opening for a cabinet back, building drawers, or in simple carcase construction. And yet, because they're so simple, we tend not to give much thought to cutting rabbets.

Like so many things in woodworking, when it comes to cutting rabbets there's more than one way to get the job done. Most of the time, I rely on my table saw for this task. But even so, there are at least a couple of different ways that you can go about it.

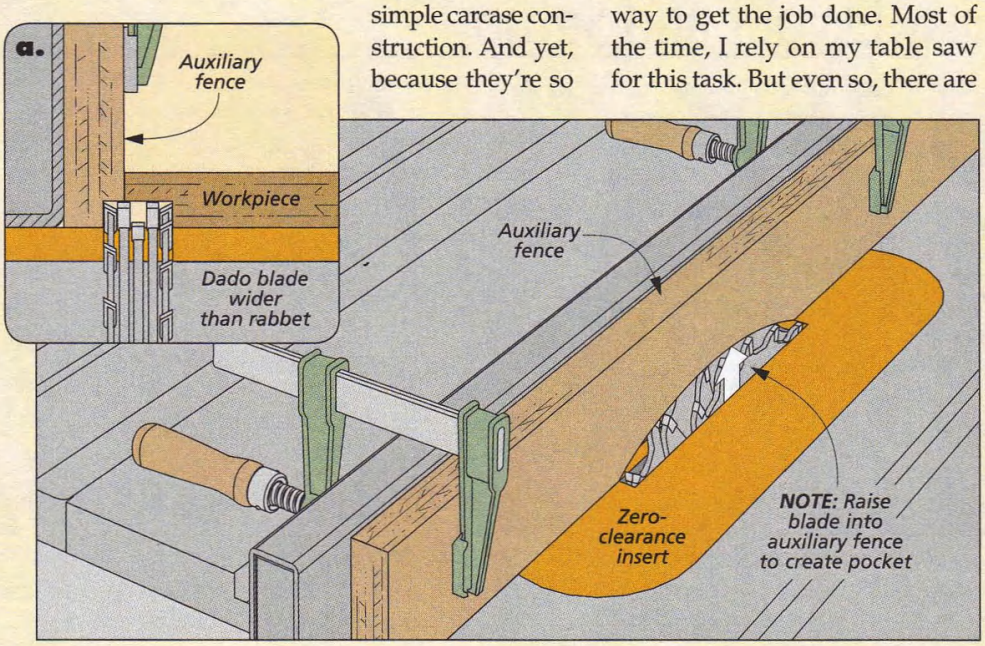

DADO BLADE METHOD

When cutting rabbets, the key is to remove as much waste as quickly as possible. And that's why my method of choice is to use a dado blade. A good-quality stack dado blade will cut rabbets quickly and accurately. And I find this method makes it easier to fine tune the width and depth of the rabbet.

AUXILIARY FENCE. The key to cutting rabbets with a dado blade is to use an auxiliary fence. Basically, this is just a narrow strip of wood or plywood that's clamped to your rip fence. The dado blade is "buried" in this auxiliary fence so that only a portion of the blade is exposed, as you see in the photo above and the drawing at left.

CONTROL. The thing I like about using an auxiliary fence is that it

makes controlling the width and the depth of the rabbet a snap. I start with the width. With the blade raised just barely above the table and the rip fence covering most of the blade, I'll make a pass on a test piece. Then I just move the fence away from the blade a little at a time until the rabbet is the width that I want.

Once I've zeroed in on the width, I creep up on the depth the same way. Just raise the blade a little, make a test cut, and check the depth. After you have both the width and the depth dialed in, you're good to go.

CONSISTENCY. Why not just use the rip fence as a guide to cut the rabbet on the far edge of the board? If you're cutting multiple rabbets, an auxiliary fence ensures all the rabbets end up with the same dimensions, regardless of the width of the workpieces. And it's safer since the piece isn't trapped between the fence and the blade.

SINGLE-BLADE METHOD

There are times when I need to cut a rabbet or two and don't want to go to the trouble of removing my saw blade and installing a dado blade.

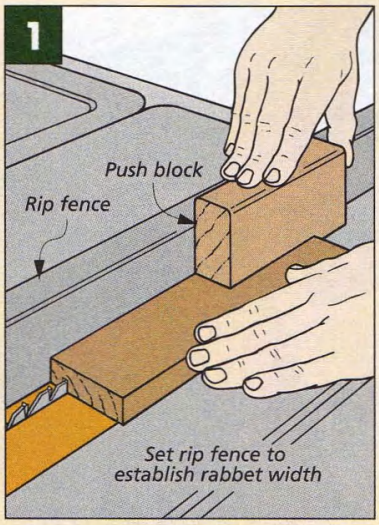

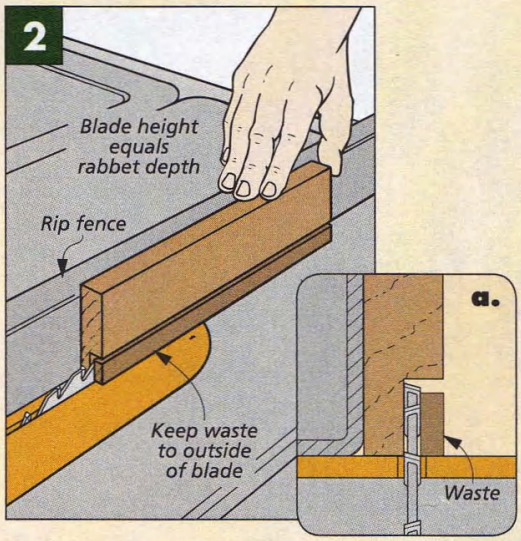

In these cases, I use a two-pass method with a single blade.

As you can see in the drawings above, the method is pretty simple. The first pass establishes the width of the rabbet. Then you simply reposition the rip fence and stand the workpiece on edge to remove the waste with the second cut.

There are just a couple of things to point out here. First, you always want to make sure that the waste piece falls away from the blade, so that it doesn't get trapped between the blade and the rip fence.

Second, it's a good idea to use a zero-clearance insert around your saw blade. This not only helps to support your workpiece when making the second pass, but it also prevents the waste piece from getting caught between the blade and the opening in the insert plate.

END RABBETS. You can also use a single-blade technique to cut a rabbet on the end of a workpiece. (See the box below.)

Regardless of which technique you choose, I think you'll agree that the table saw is the way to go. W

How-To: Cut Rabbets on the End of a Workpiece

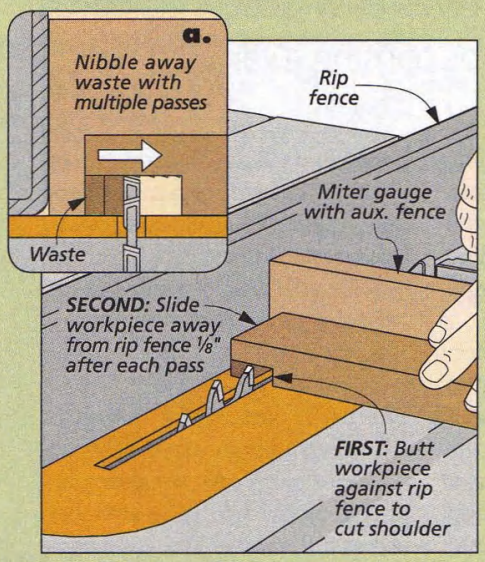

Multiple-Pass Method. *Use the rip fence as a stop to establish the shoulder of the rabbet on the first pass. Then remove the remaining waste with additional passes.*

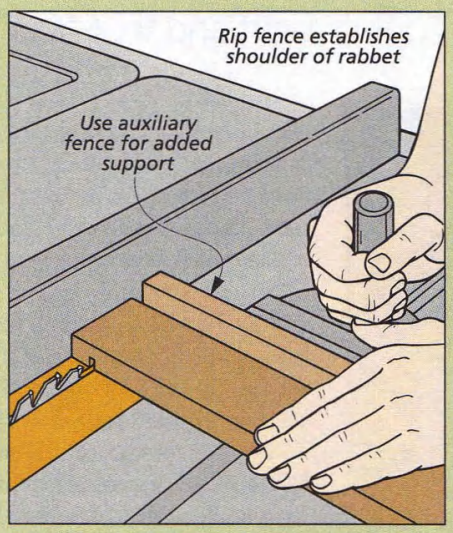

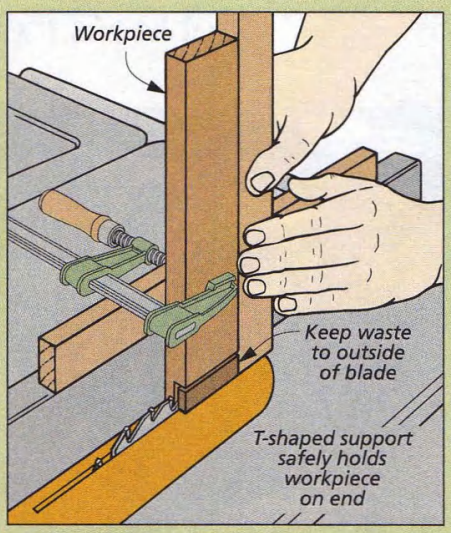

Two-Pass Method. *The shoulder of the rabbet is established with the first pass, using the rip fence as a stop. Then to cut away the remaining waste, stand the workpiece on end for the second pass. A simple, T-shaped jig is used to support the workpiece and back up the cut. Again, make sure that the waste falls to the outside of the blade.*

cell phone Charging Station

This handy caddy for electronic devices gives easy access to cords but keeps them out of sight and free from becoming a tangled mess.

▲ A flip-down panel in the front of the charging station lets you bring charger connections to the front for easy access.

Most of us have a few electronic devices that make our lives easier. Add to these the ones used by the rest of the family, and the challenge becomes keeping the gadgets organized and charged.

This handy charging station brings all those personal digital assistants, cell phones, and MP3 players to one location with the wires neatly stored for easy access. Made of inexpensive poplar and maple, the station is easy to build using simple joinery techniques.

There's just a box, a tray, and two hinged panels which install easily with brass pins. The access panels hide a power strip where unsightly transformers can be kept out of sight. The electronic devices sit on a row of brass pins mounted in one panel and also allow cords to pass through to the devices.

BOX CONSTRUCTION

The main part of the station is really nothing more than an open box with four parts: two sides, an open 2-piece back, and a stretcher across the bottom. The open back is designed to create ventilation for the charging transformers.

I chose a power strip made to accommodate several transformers

at one time so I could make maximum use of the station. You might want to choose your power strip before you begin construction so you can build the charging station to fit. For information on where to find the power strip I used, see Sources on page 51.

SHAPE THE SIDES. Since the sides are identical, I taped the two pieces together with double-sided tape and cut them to size at the same time. You can also cut the notches for the bottom stretcher while the sides are joined (see How-To box below). Finally you can drill the through holes for the pins that will hold the access and support panels (drawing at right). Then separate the workpieces to cut the rabbets in the back and drill the holes for the catch strike and support panel stop pins (detail 'c').

VENTILATION. I used a stretcher across the bottom and built the back in two pieces. The stretcher and back piece are cut to size. Then a notch is cut in the back for the power strip's cord. A piece of *Velcro* attached to the back on the inside will hold the power strip in place (see right drawing).

RAIL. The tray back rail will hold the tray that you'll add later, so it needs a groove cut in it before it's attached to the box. I started with an oversized workpiece to make the rail. So, using the oversized workpiece and a standard saw blade, I cut a ¼"-wide groove ¼" deep (detail 'a') and then cut the workpiece to final size.

ASSEMBLE THE BOX. The box goes together quickly. First, just attach the stretcher across the bottom with screws. Then the back is screwed into the rabbets, flush with the bottom of the sides as shown in detail 'b.' Finally you can add the tray back rail.

Once the box was assembled, I stained it a dark color as shown in the main photo. Let it dry while you build the rest of the station workpieces in maple.

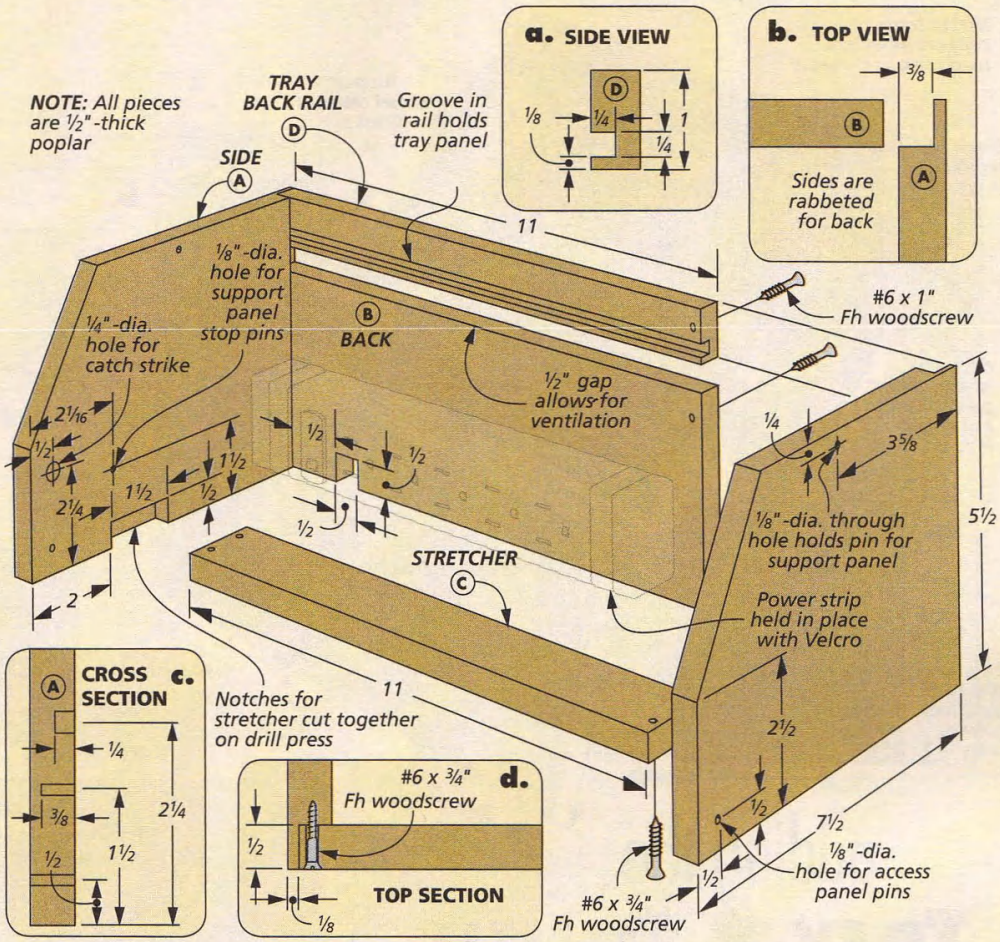

How-To: Shape the Sides

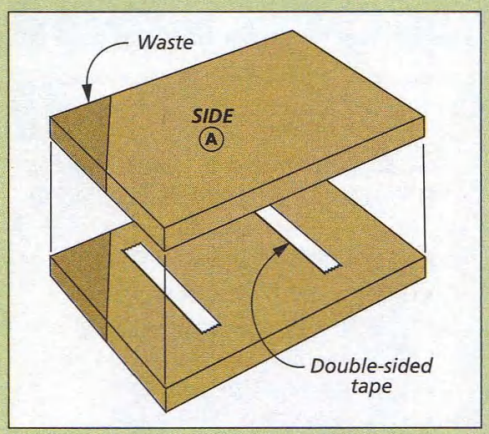

Cut to Size. *The two sides can be taped together with double-sided tape and then cut to size on the table saw.*

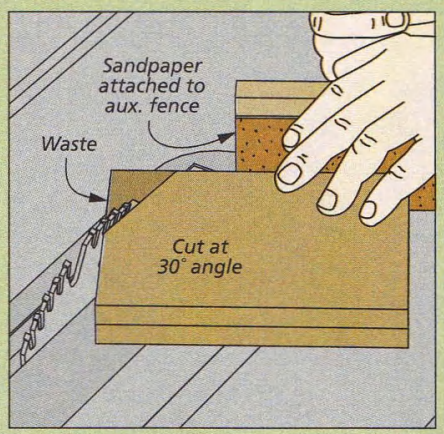

Angle Cut. *The angle on the front of the sides is cut at 30°. Sandpaper attached to the fence will keep it from slipping.*

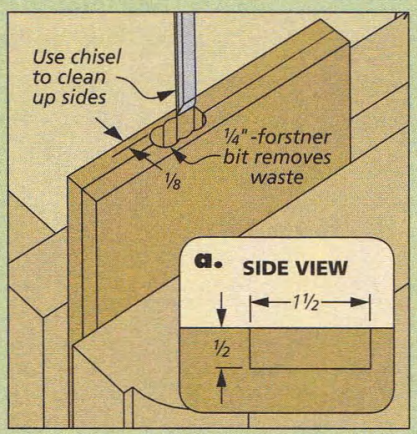

Notches. *Cut the notches for the stretcher by drilling first with a Forstner bit then cleaning up with a chisel.*

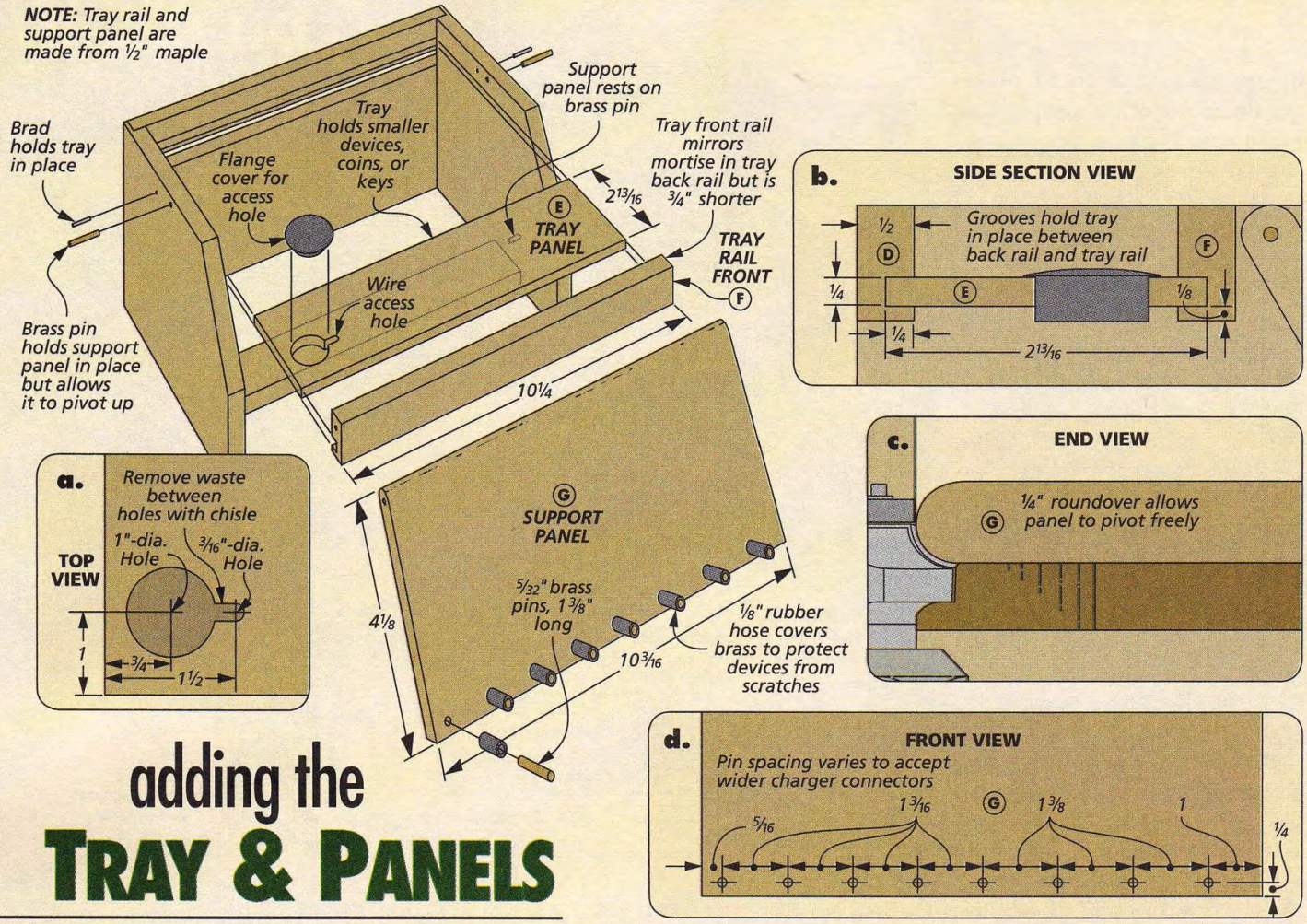

adding the TRAY & PANELS

To hold small items, like cell phone head sets, I added a tray to the top of the charging station along with the support panel on the front. The supports a large range of electronics on brass pins.

TOP TRAY. The tray is made from a thin panel with a front rail. The tray rail and the tray back piece hold the panel in place. You can cut the tray panel to size from 1/4"-thick stock and then drill the access hole as shown in detail 'a.' The front rail is made in the same way as the back rail. Again, I started with an oversized piece and a standard-sized saw blade. After the groove is cut you can cut the workpiece to final size.

ASSEMBLE TRAY. Once the tray pieces are made, you can center the tray panel in the upper back, anchoring it with a brad through the sides, as shown in detail 'b.'

SUPPORT PANEL. The support panel holds electronic devices upright in the station with the help of brass pins inserted at the bottom of the panel. It's just a board with a rounded top edge. The pins along the bottom are covered with rubber hose to protect against scratches. They also create an opening for power cords to pass through.

To prevent the drill bit from wandering in the end grain, I used a shop-made jig to drill the pivot pin holes in the side of the support panel (see Shop Notebook, on page 28).

Materials, Supplies & Cutting Diagram

A	Sides (2)	1/2 x 5 1/2 - 7 1/2	D	Tray Back Rail (1)	1/2 x 1 - 10 3/4	G	Support Panel (1)	1/2 x 4 5/8 - 10 3/16
B	Back (1)	1/2 x 4 - 10 3/4	E	Tray Panel (1)	1/4 x 2 13/16 - 10 1/4	H	Access Panel (1)	3/4 x 2 1/4 - 10 3/16
C	Stretcher (1)	1/2 x 1 1/2 - 10 3/4	F	Tray Front Rail (1)	1/2 x 1 - 10 1/4			

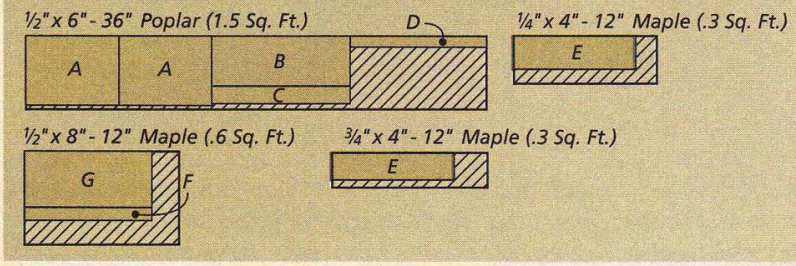

- (1) 5/32"-dia. Brass Rod (11" Long)
- (1) 1/8"-dia. Rubber Hose (7" Long)
- (1) 1/8"-dia. Brass Rod (10 1/2" Long)
- (2) 1/4"-dia. Cylinder Ball Catches
- (1) 1"-dia. Vinyl Flange Insert
- (12) #6 x 3/4" Fh Woodscrews
- (1) Electric Power Strip

I cut the panel to size after the holes were drilled in case I varied slightly in drilling. Then you can round over the top edge on the router table (detail 'c').

Finally, you can drill holes for brass pins across the bottom of the panel. If you take a look at detail 'd' on the opposite page, you'll notice some pins are spaced further apart than others. I did this to accommodate wider connectors.

After drilling the holes, you can cut the brass pins to size. For a handy jig to cut the brass, see Shop Notebook on page 28. Once the pins are inserted, you can cover them with rubber hose. All that's left is to attach the panel with brass pins through the holes you drilled earlier in the sides (detail 'b').

PLUG ACCESS PANEL. The access panel at the bottom of the station does just what it says — gives you access to the power cords. The beveled edge at the top of the panel should rest against the brass pins in the support panel. This way, the pin ends won't scratch electronic devices placed in the station.

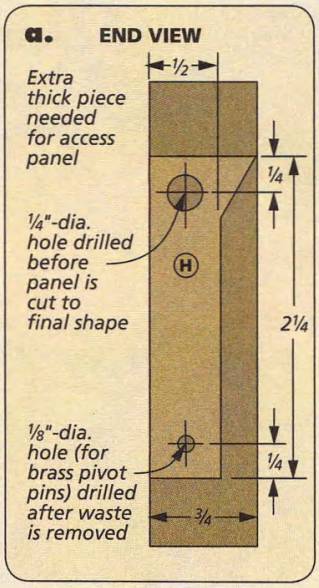

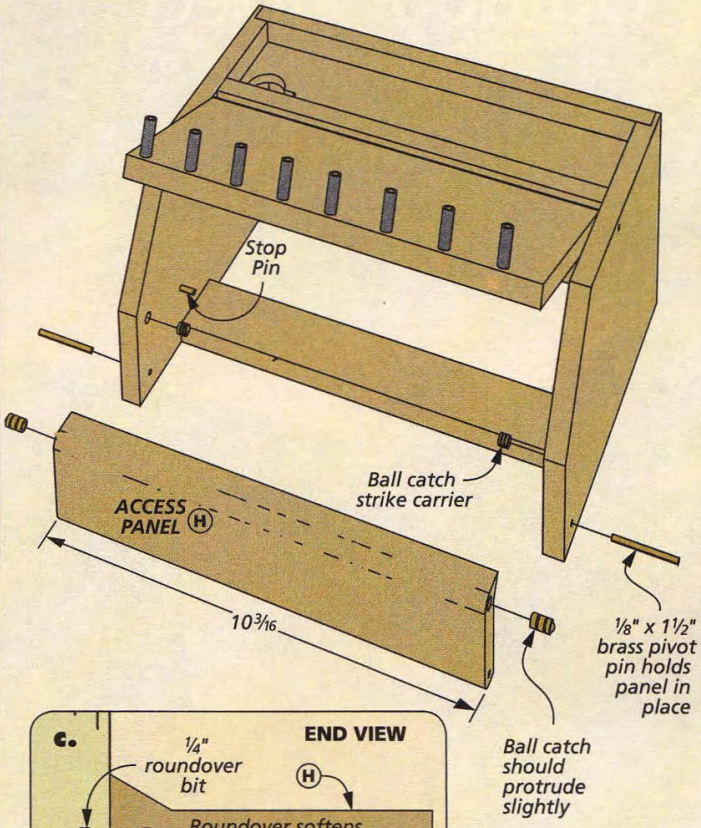

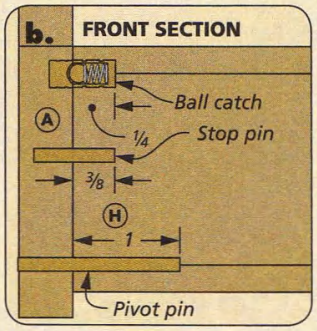

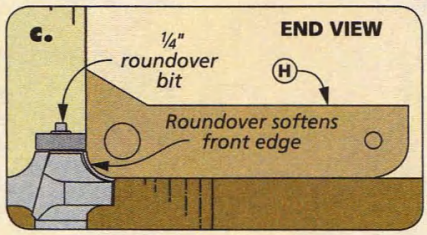

It's best to drill the holes for the ball catch in the access panel first, so I started with an oversized, 3/4"-thick blank (detail 'a'). I used a doweling jig this time since the stock is 3/4"-thick (Figure 1 in How-To box).

The access panel needs some shaping on the table saw after the holes are drilled. To shape the bevel on the inside edge of the panel, I used a two-step process on the table saw, as shown in Figures 2 and 3 below. I finished this part by adding roundovers on the front edge. This softens the front of the panel. And it matches the support panel (see detail 'c').

ATTACH THE PANEL. To finish up the station, insert the ball catches in the panel (detail 'b'). The catch should be inserted so the ball just protrudes from the side of the panel. The final step is to attach the panel with brass pins through holes drilled earlier in the side pieces of the charging station.

After a couple of coats of finish, you'll know just where to place your cell phone, MP3 player, or PDA when any of them needs a charge.

How-To: Make the Access Panel

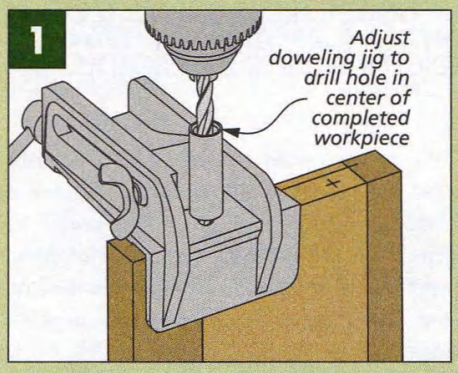

Drill Holes. *A doweling jig can be used to drill the 1/4"-dia. holes for the ball catches in the ends of the access panel.*

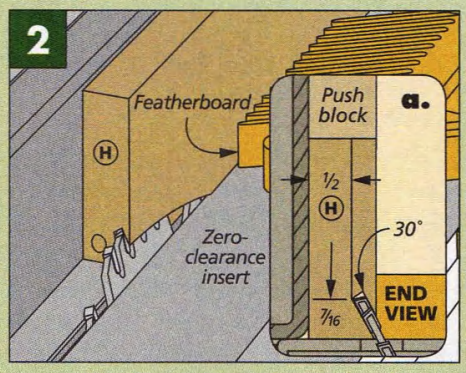

First Cut. *The first cut is made with the panel standing upside down. Just set the blade at 30° and cut the bevel.*

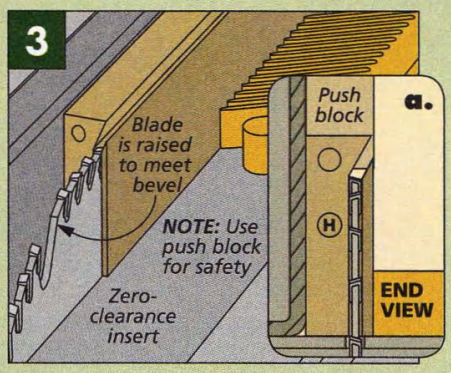

Second Cut. *The second cut is made with the panel upright. The blade is raised to intersect with the bevel.*

easy-to-build Garden Bench

Whether in a favorite corner of the garden or under a big shade tree, this solid and stylish outdoor bench will complement any landscape.

Straight lines and gentle curves give this solid bench a style that will bring beauty and simplicity to any outdoor space.

The joinery for this bench is just as easy: A few tapers, angles and a straightforward joint in the legs make this an easy bench to build. And a rubbed oil finish protects the bench from the elements.

The bench has just six main parts, four legs, a stretcher and a top, held together with dowels and screws. All the bevels are cut at the same angle so it's easy to set up the right cuts. Once all the pieces are sized, it's just a matter of a few dadoes and a handful of mortises and the bench goes together for years of outdoor enjoyment.

So, with a few boards and only a weekend of work, you'll have a great bench. I chose white oak to build the bench because it's strong and naturally resistant to decay. But other types of wood can also be good choices for garden projects. Western cedar or redwood, for example, are frequently used for outdoor furniture.

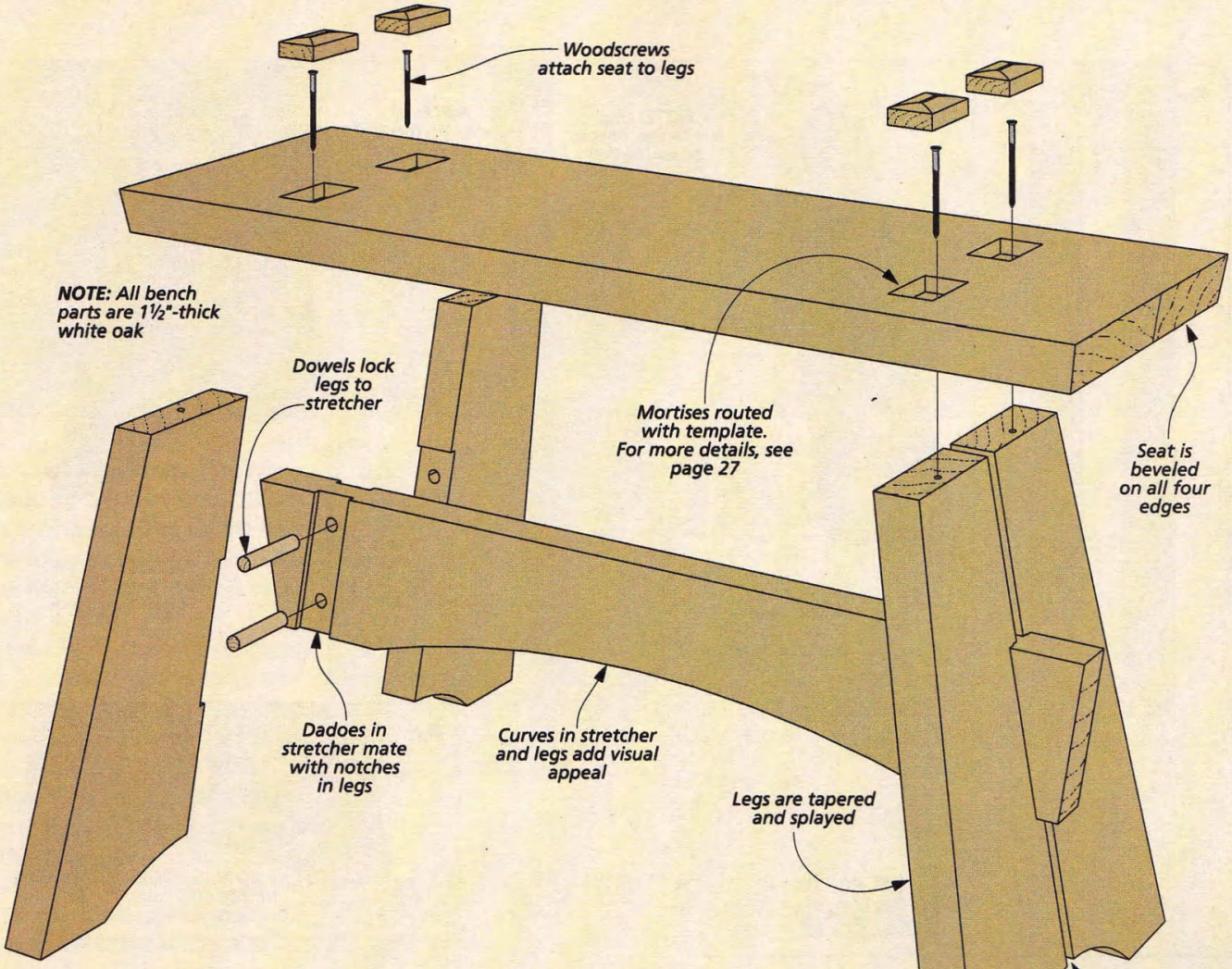

CONSTRUCTION DETAILS

OVERALL DIMENSIONS:
36"L x 12"W x 18"H

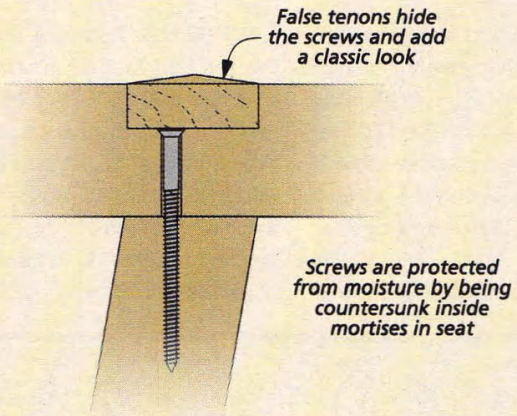

Materials, Supplies, & Cutting Diagram

A	Legs (4)	1½ x 6¾ - 17	**D**	False Tenons (4)	1½ x 2½ - ⅝
B	Stretcher (1)	1½ x 5 - 32	• (4) #8 x 3" Fh Woodscrews		
C	Seat (1)	1½ x 12 - 36	• (4) ½"-dia. dowels (2½" long)		

1½" x 7" - 72" (7 Bd. Ft.) White Oak

1½" x 5½" - 36" (2.8 Bd. Ft.) White Oak

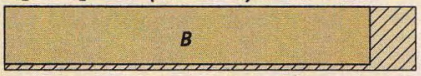

1½" x 6½" - 84" (7.6 Bd. Ft.) White Oak

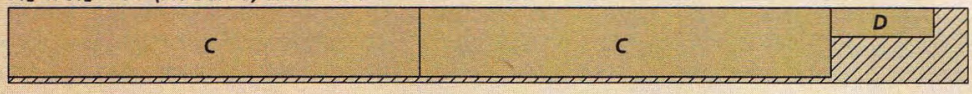

***NOTE:** Parts planed down from 1¾"-thick stock*

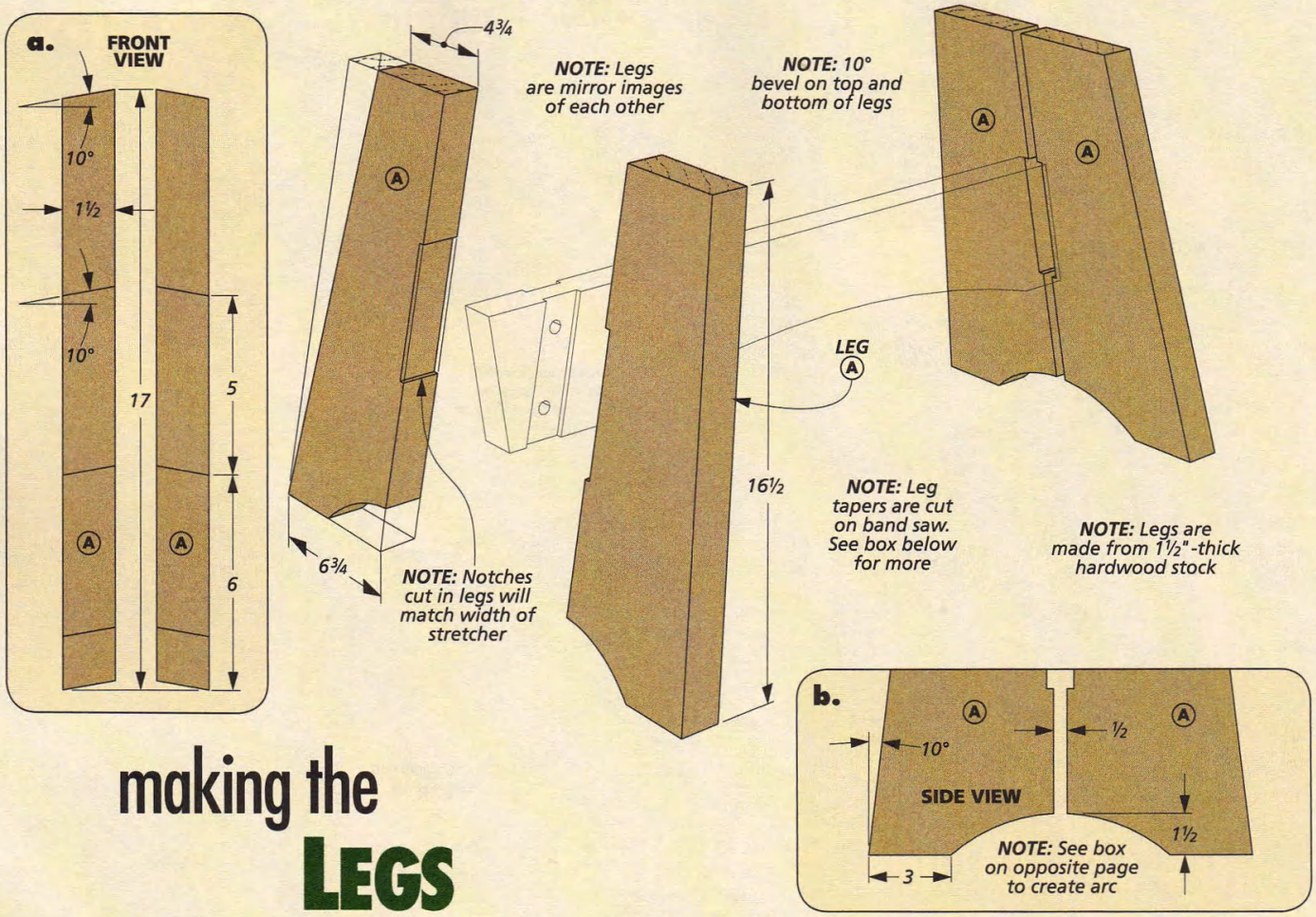

making the LEGS

Two pairs of angled legs joined to a notched stretcher give this bench a solid base. Dadoes on both ends of the stretcher fit in the notches in the legs and are connected with dowels. This solid-wood joinery leaves a bench that won't be susceptible to rust. And moisture will be less of a problem as well.

SIZE THE LEGS. I started by cutting the four leg blanks to size. Next, you can cut the bevel on the top and the bottom of each leg piece. With the bevels cut you'll have a reference point to work from for the next step when you lay out the beveled notches on the inside edge of each of the legs.

NOTCHES. To lay out the notches, I used a bevel gauge set to match the cut on the bottom of the leg and used it to make the layout lines for the notches (detail 'a'). You might find it easier to lay out both sides at the same time standing the legs back to back. This way you'll be sure to have matching cuts.

Because the legs are mirror images, you'll need to reset your miter gauge after cutting the notches on the first two legs (top drawings on opposite page). I used a wide dado blade and just cut to the layout lines to make the notches. Two legs are cut 10° left of zero and two are cut 10° right of zero.

LEG ARC. Adding to the design of the bench is the arc at the bottom of each leg. To lay out a smooth, continuous arc, I clamped the two matching legs together with a ½" spacer between them (How-To box opposite page). This will make a gentle curve at the top of the arc.

Once the arc is laid out, take the pieces over to the band saw and tilt

How-To: Quick Tapers

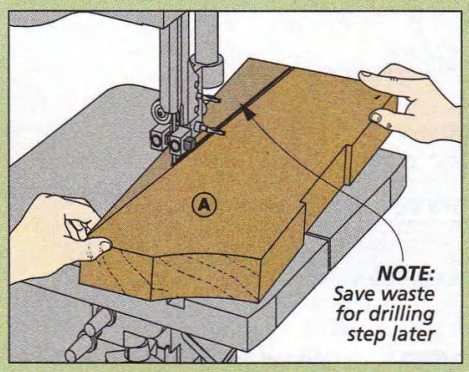

Cut the Taper. *After marking the taper, make a freehand cut as close to the line as possible, leaving a little excess.*

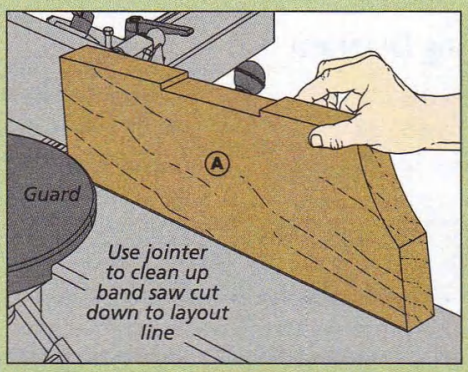

Smooth the Edge. *To smooth the saw marks left by the band saw and trim to the layout line, make a pass over the jointer.*

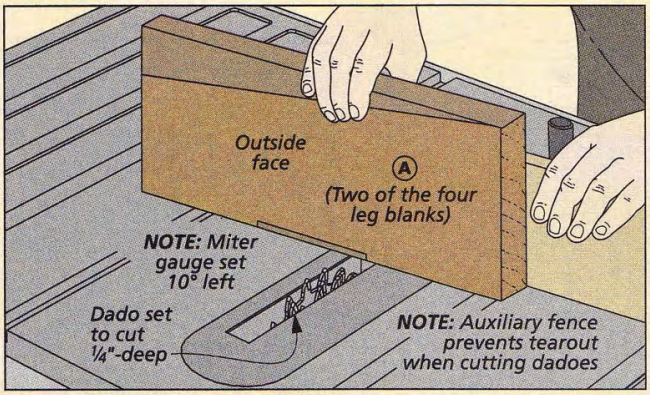

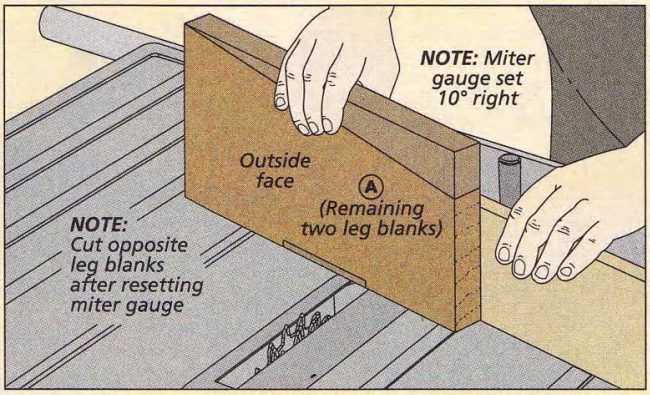

the table 10° to make the cuts. When it's finished, you can sand the cut with a sanding drum on the drill press. To preserve the angle of the beveled cut, I tilted the drill press table 10° as well.

If your band saw or drill press has a fixed table, you can cut a couple of 10° wedges and fasten them to a piece of MDF to make a tilted table. This will give you a beveled surface to lay the legs on to make the cuts or sand the edges.

TAPER. The final step for making the legs is to cut the tapers on the side of each piece. I laid the adjoining leg pieces side-by-side with the notches matching so that I would be sure to mark the tapers in the correct direction.

Once the tapers are marked, you can take the legs over to the band saw again to make the cuts. Just cut as close to the layout line as possible. Then clean up the cut with a jointer, shaving it down to the layout line (How-To opposite page). Save at least one piece of the waste from this cut. You'll need it later when it's time to add the stretcher.

APPLY FINISH. Usually, I wait to apply a finish to a project after it's completed. But this is an outdoor project. And it has some areas that will be hard to access once it's assembled (like the narrow space between the two legs). So you'll want to apply an exterior oil finish to the pieces as they are completed (refer to Sources on page 51 for finish options). But don't apply finish to the notched areas or the dado in the stretcher you'll build next. These areas will be glued when the base is assembled later.

How-To: Beveled Arcs

Marking and cutting the beveled arcs on the bottom of the leg pieces are simple tasks with the help of a 12"-dia. template. The template will give you the correct curve for the arc. Just place the template at the top of the arc and line up the centerline of the circle template with the center line of the side assembly.

To complete the arc, just cut to the line on the band saw and smooth the edge with a sanding drum.

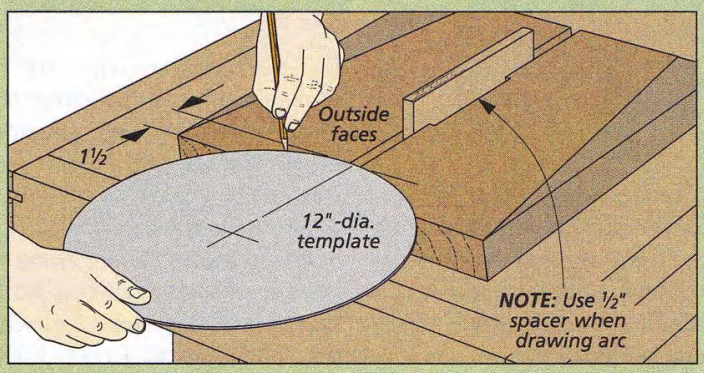

Mark the Arc. *A ½" spacer placed between the legs allows you to mark a continuous arc across the bottom of the base. A 12"-dia. template will give you the proper arc.*

Make the Cut. *Tilting the band saw table to 10° allows you to cut the arc to match the angle of the top and bottom of the legs. Make the cut on the outside of the layout line, then sand it smooth.*

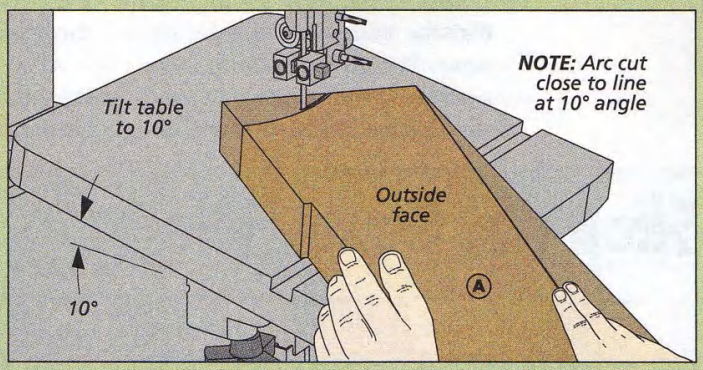

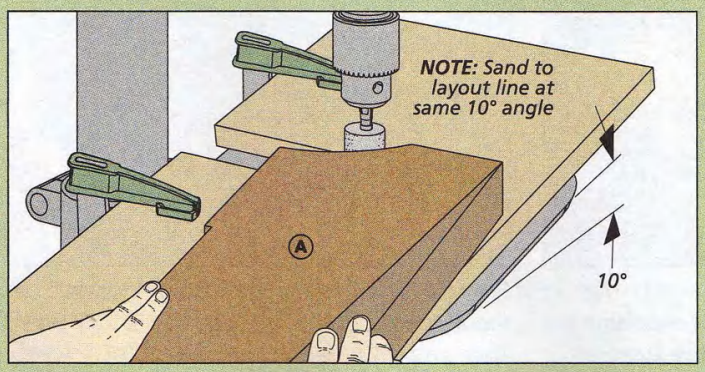

Sand it Smooth. *A sanding drum will make short work of finishing the arc. A piece of MDF under the workpiece will raise it enough to sand the entire edge at one time and keep the drum off the table.*

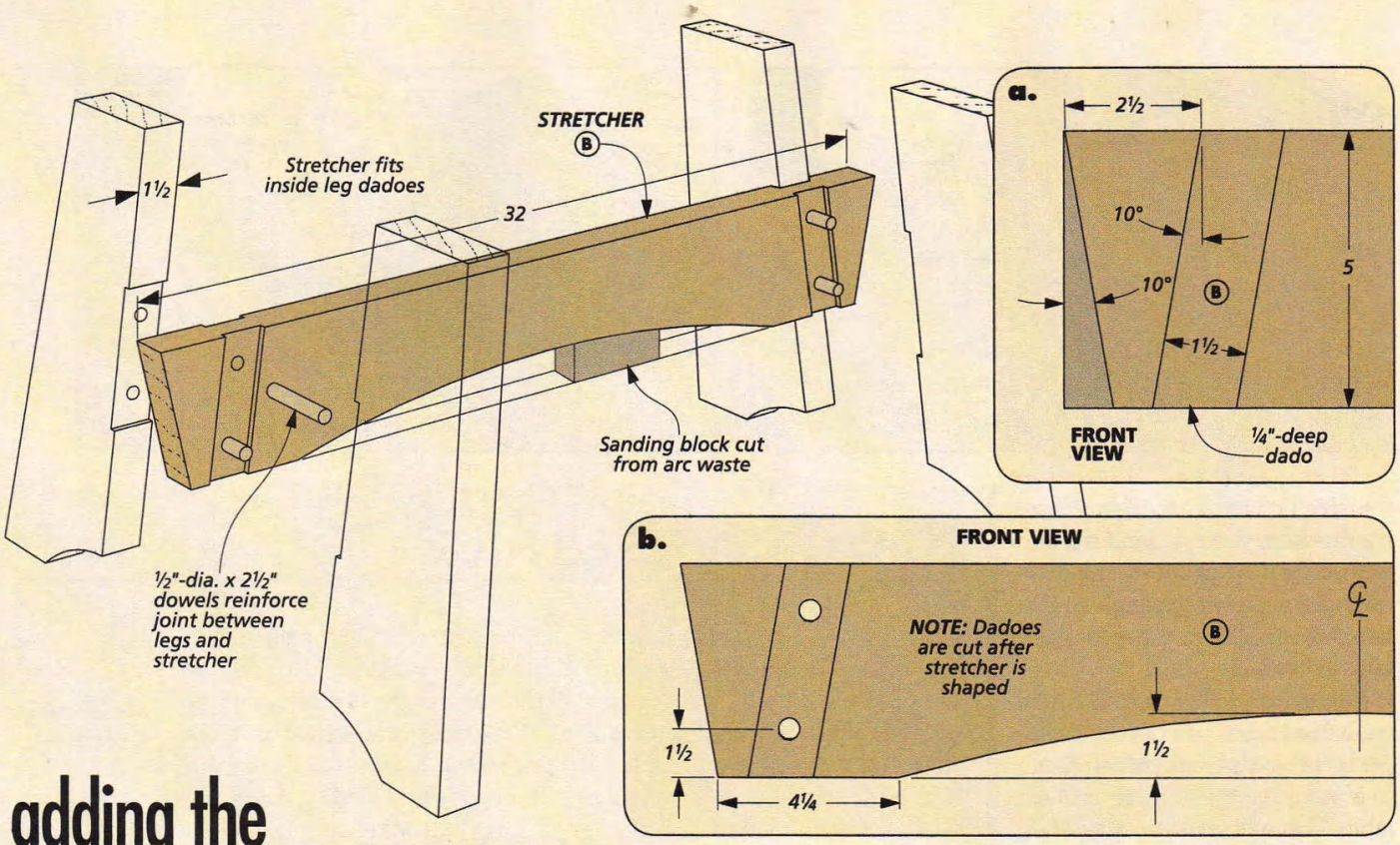

adding the STRETCHER

With the legs completed, the next step is to add the stretcher. This piece is as simple to make as the legs. It just takes one curve and a couple of dadoes after the workpiece is cut to size.

SIZING THE STRETCHER. It's important that the joinery on this bench is snug. The goal here is to have a perfect fit between the legs and the stretcher, so if you start by cutting the stretcher a hair wide, you can shave it down on the jointer later when you're ready fit the stretcher in the notches. But for now, you can cut the piece to length by mitering the ends.

ARC. To make the arc along the bottom of the stretcher, I bent a thin strip of wood until it matched the end points and centerline of the arc (detail 'b'). Then just trace the line with a pencil.

After it's marked, you can cut the arc on the band saw and then clean it up with a sanding block. If you use a piece of the waste from the cut, you'll have a sanding block that closely matches the arc (see main drawing above).

DADOES. The final step is to cut the dadoes. I used a ¾"-wide dado blade in the table saw and cut to the lines as before.

FITTING THE BASE. When I have interlocking pieces on a project like this one, I like to bring the workpieces together for a dry fit. If the stretcher is too wide, now is the time to shave off a bit on the top.

DOWEL HOLES. Once the base is fit together, you can drill the holes for the dowels that reinforce the joint. I drilled the through holes in the stretcher first (detail 'b').

Now you can mark the holes in the legs using dowel centers (see Shop Tip at left). For the second step of this process, you'll need the piece of waste you saved when you cut the tapers in the sides of the legs. Details of this step are shown in the box at left.

ASSEMBLY. All that's left is to assemble the base. I used a waterproof glue (*Titebond III*) in the interlocking joint and on the dowels. As you assemble you'll want to make sure that the legs are evenly spaced at the top and at the same angle.

Shop Tip: Dowel Holes

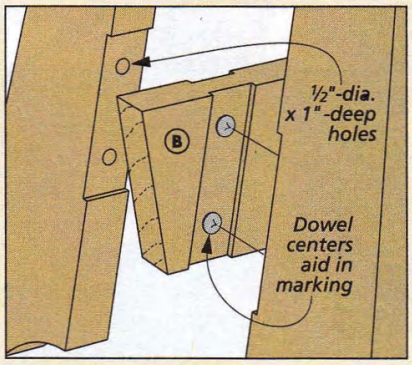

Mark Holes. *Place dowel centers in the holes in the stretcher and clamp the legs together to mark hole location.*

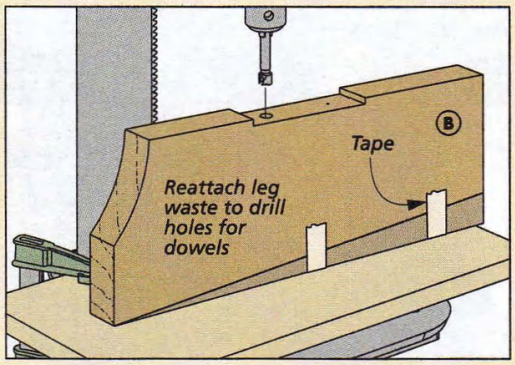

Predrill for Dowels. *Reattach the waste from the taper cut to level the legs on the drill press. Then just drill holes to match length of dowels.*

making the SEAT

Of course, no bench is complete without a comfortable seat. This seat is just a glued up plank with beveled sides, screwed to the legs through mortises in the top. False tenons cover the screws.

After gluing up the seat blank, I cut it to size with bevels on all four edges. I also softened the sharp corners of the seat with 220-grit sandpaper.

As I mentioned earlier, there are four mortises cut in the seat to hold the false tenons (detail 'b'). To create these mortises, I made a routing template from four pieces of scrap lumber (How-To box below). Using this template with a routing bit, you can rout the mortises and then clean up the corners with a chisel.

The final step is to drill holes for the screws that hold the seat to the legs (detail 'a'). You can do this on the drill press.

FALSE TENONS. The four false tenons are the finishing touches for the bench. I cut all of them from a blank sized to fit the mortises in the seat. You can start with a long blank, cut the tapers on each end and then cut off a tenon from each end of the block (lower right drawing). You can sand the end grain with 440-grit sandpaper so the wood doesn't take on too much finish.

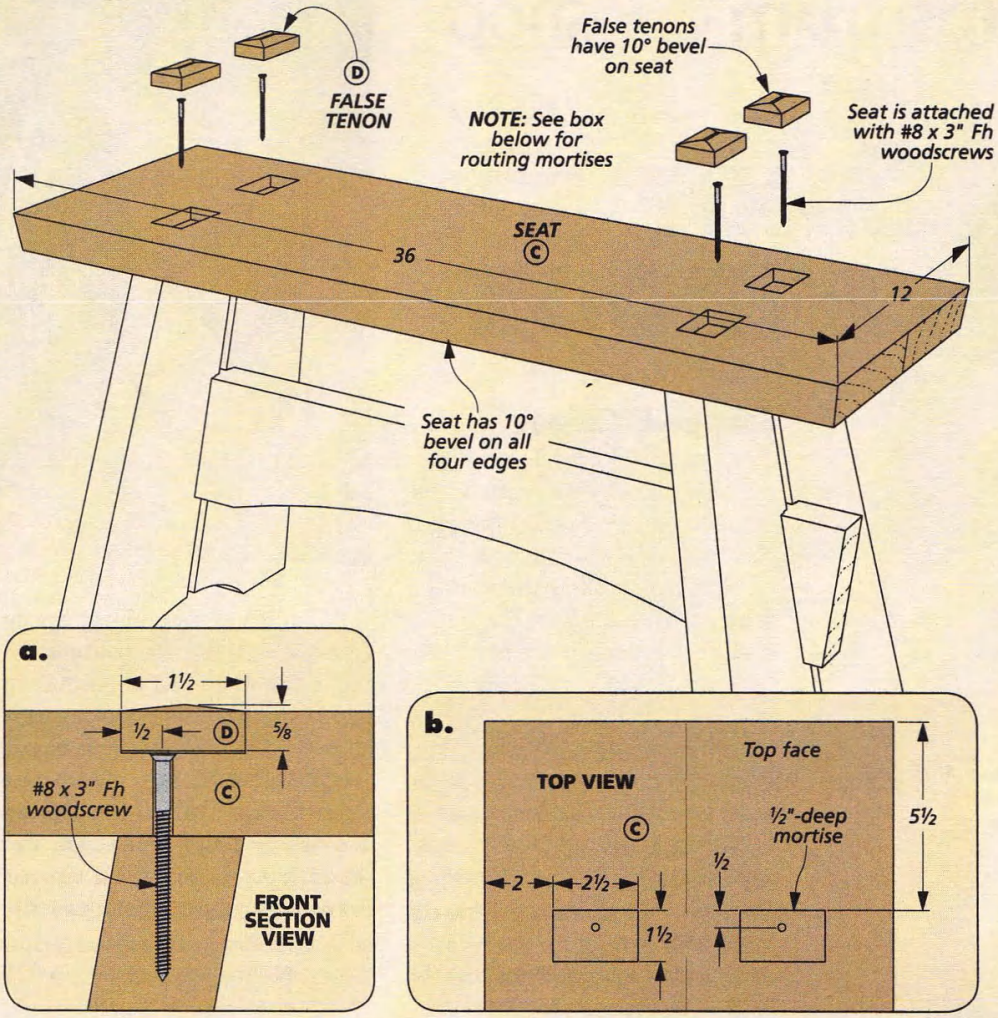

ATTACH THE SEAT. Before you attach the seat to the base, you'll want to apply the oil finish, being careful not to get any oil in the mortises.

Once the finish is applied you can attach the seat. Just center the seat over the base and drill pilot holes into the legs and insert the screws to hold the seat down. The final step is to glue the false tenons in the mortises. You can do this by spreading glue in the bottom of the mortise and lightly tapping the tenon in.

Once the seat is attached, you'll have a nice place to sit in the yard and enjoy the outdoors.

How-To: Mortises for False Tenons

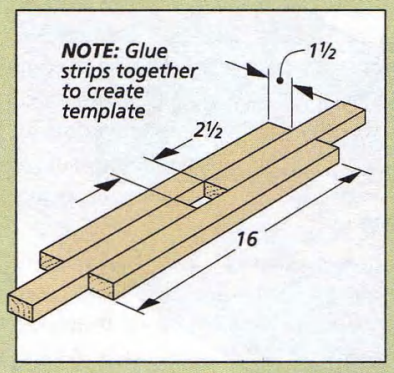

Template. *A routing template for the mortises can be made from four pieces of scrap as shown here.*

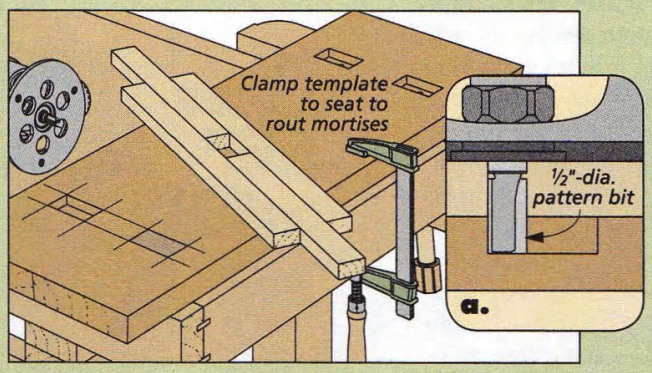

Rout Mortises. *I used a ½"-dia. pattern bit to rout the mortises in the seat, making two passes ¼" deep. To square up the corners, use a chisel.*

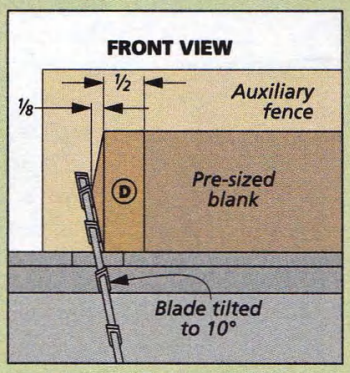

Bevels. *The false tenon bevels are cut on the table saw with the blade tilted to 10°.*

SHOP NOTEBOOK

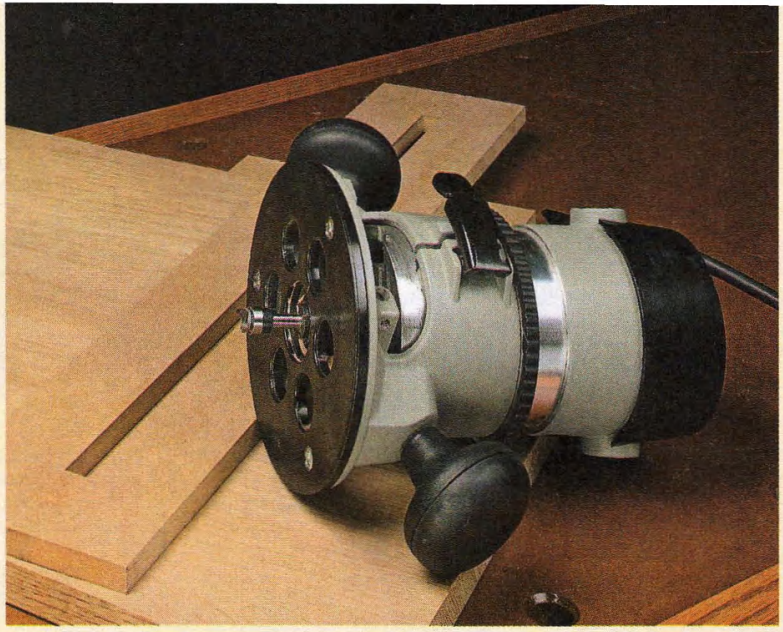

Stopped Dadoes

The joinery for the wine server on page 30 relies on snug-fitting, stopped dadoes to hold the fixed shelves. And there's no better way to cut these dadoes than with a router. But routing with a simple straightedge won't ensure the dadoes stop at exactly the same place on both sides.

To rout the dadoes accurately, I made the simple jig shown in the drawings below. It's just a pair of MDF guides, separated by two small spacers cut to match the width of the dado. To keep the dado square, and to reference the cuts from the square edge of the sides, I added a cleat to the jig.

When it's all assembled, the jig forms a channel for routing the dado. The nice thing about this jig is that the channel provides easy alignment for laying out the cuts.

EASY ADJUSTMENT. But there's one more feature that makes this jig a practical solution. As you can see in detail 'a' below, the tapered front edge of the cabinet means the upper shelf can't be as long as the lower shelf. To accommodate a shorter dado, you can move the cleat on the jig forward 2".

A dado cleanout bit makes short work of these dadoes. I used double-sided tape to hold the jig in position while I routed the dadoes in both sides. Then you can square up the ends with a chisel.

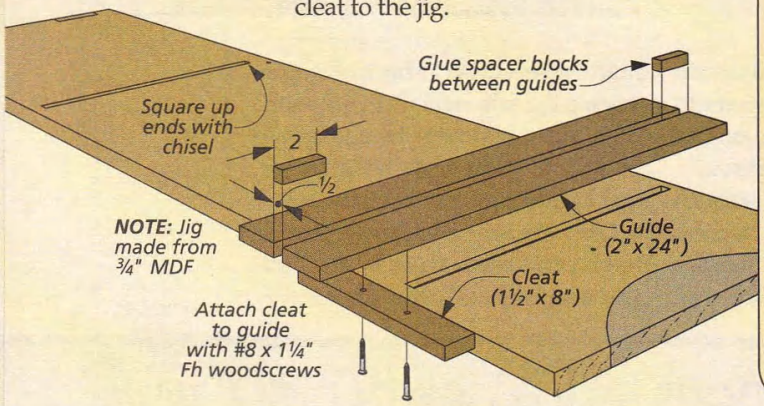

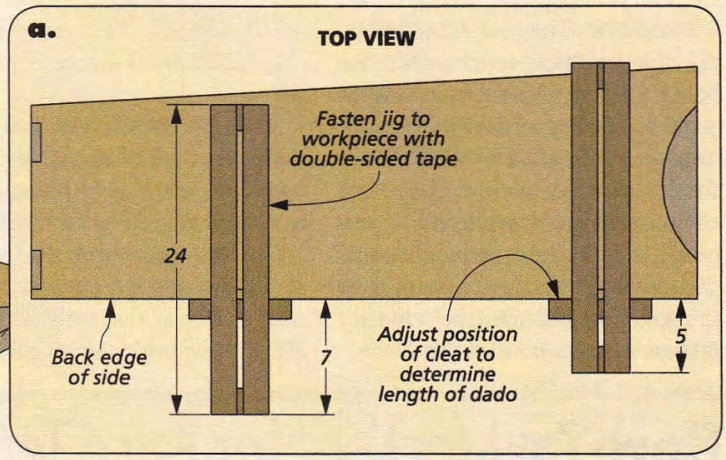

Template for Notches

The upper stretchers on the wine server fit into notches in the sides. Once again, I turned to a router and template to cut these notches.

The pattern for the template is shown at left. To form the template, just glue short strips of MDF to the main body of the template.

You can see how the jig works in the drawing at right. A bearing-guided bit rides along the template and removes most of the waste. Then just clean up the ends of the cuts with a chisel.

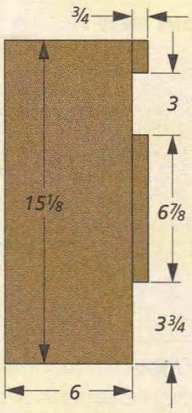

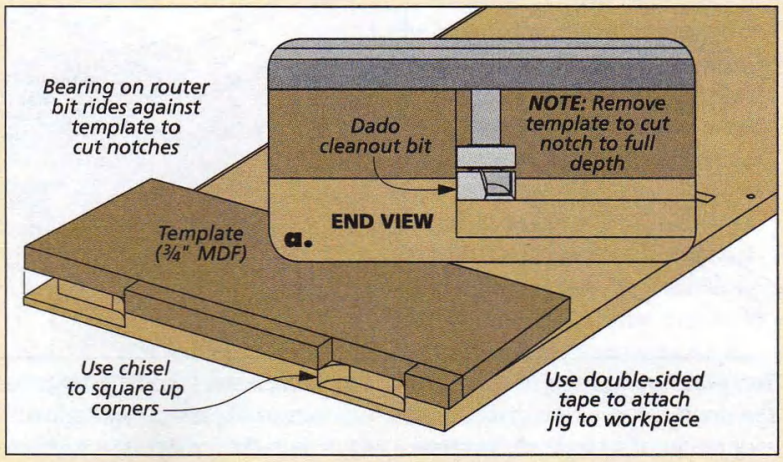

Cutting Brass Pins

When it came time to cut the brass pins for the recharging station on page 18, I made a simple jig to hold the brass rod. This way, it can be cut safely into shorter pins.

MAKE THE JIG. To make the jig, I started with a ¾"-thick block of wood 2" wide. Then I drilled a hole the same diameter as the brass rod through the width of the block as shown in Figure 1.

USING THE JIG. Once the jig is drilled, make sure you have a carbide-tipped saw blade installed to cut the brass. And set the rip fence as shown in Figure 2a. Then insert the brass rod in the block until it butts against the fence and make a pass over the blade. (The blade should be raised just high enough to cut the brass.) The saw will cut the brass, but leave the cut piece in the block. This way, you're protected from any flying metal chips or loose brass pins.

As each pin is cut to length, just push it out the other side of the block with the remaining length of rod. Then you're ready to cut the next piece to length (Figure 2a).

Cutting all the brass support pins to the same length is easy with this simple shop-made jig. ►

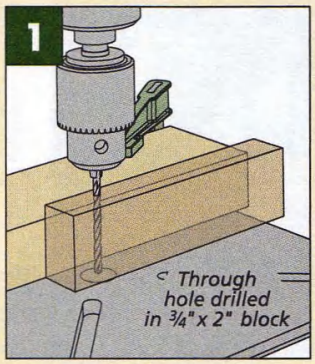

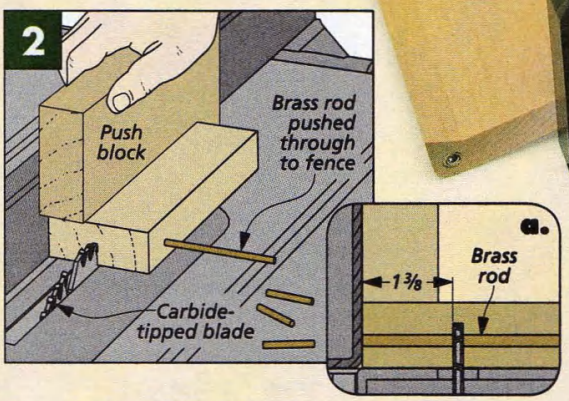

Centering Jig

A doweling jig can help you drill a straight hole in end grain. But if you have small holes to drill, like in the charging station on page 18, this shop-made jig can be the answer.

This jig is pretty simple. It's just a block with a groove cut in the center to fit over the workpiece. A hole drilled in the center of the groove aligns the drill bit.

CUTTING THE GROOVE. I used a ¾"-thick block of hardwood about 2" square. I cut a ¼"-deep groove ½" wide in the center of the block (Figure 1). The next step is to drill a guide hole through the block. For this I used a drill press. It's important here to make sure the hole is centered in the groove.

It's also important to use a standard twist bit when drilling into end grain. Using this type of bit will keep the bit from wandering at the start up of the drilling operation, making a cleaner hole.

To use the jig, I matched an alignment mark on the workpiece with the centerline on the jig, as shown in Figure 2. Then the drill bit can be lowered through the jig and into the workpiece (Figure 2a).

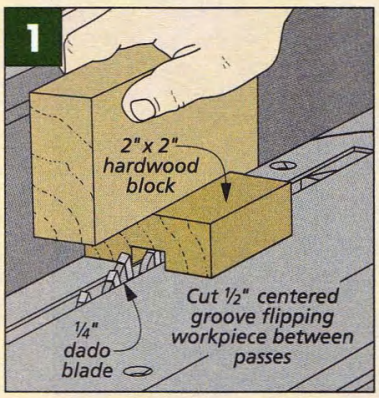

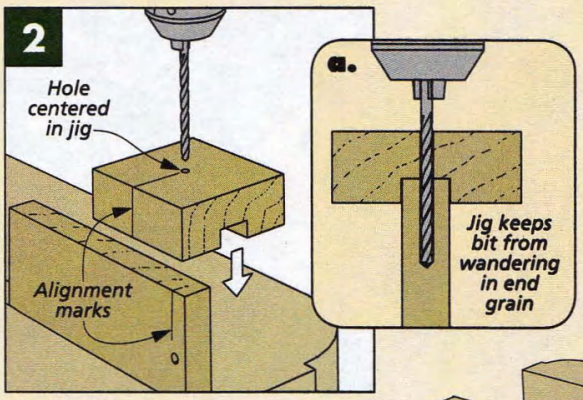

Handy Radius Stick

The sides and lower stretcher of the wine server both feature curved profiles. To lay out the arcs for these cuts, I used the method shown in the drawing at right.

I started with a long piece of ¼" hardboard to make a trammel arm. Then you can fasten a block to your workbench using double-sided tape. A nail through the arm into the block forms a pivot point.

To adjust the radius of the cut, measure out from the nail and drill a hole for the pencil. Now you can scribe a perfect arc, ready to cut out at the band saw or with a jig saw. W

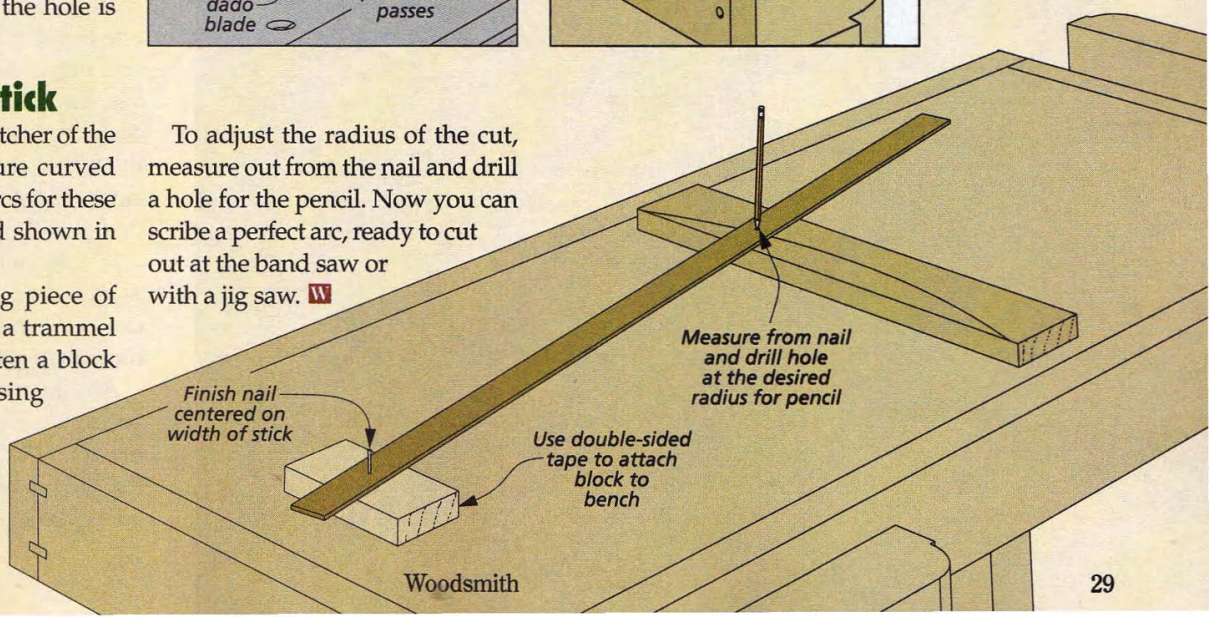

Classic Oak Wine Server

Host your friends in style with this elegant and functional project.

Clean lines and solid riftsawn oak panels give this wine server a timeless quality. But it's also a functional piece that's useful in a modern home. It's a good example of how you can adapt classic furniture styles to fit the changing needs of the twenty-first century household.

The wine server is loosely based on a turn of the century drop-front writing desk. But instead of the door opening to reveal a writing surface and pigeonholes for stationery storage, the space holds your wineglasses and accessories. Even after changing the function and most of the dimensions, the character of the original design still shines through.

It's also a great project for woodworkers of any skill level. In fact, you can build this wine server with little more than a table saw and router.

And there's nothing too complicated about the construction, as you can see in the drawing at right. I used screws for most of the joints, then covered the screw heads with false tenons.

CONSTRUCTION DETAILS

OVERALL DIMENSIONS:
27½"W X 18"D X 53"H

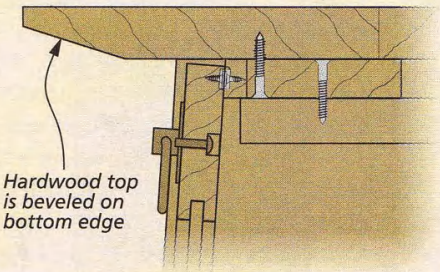

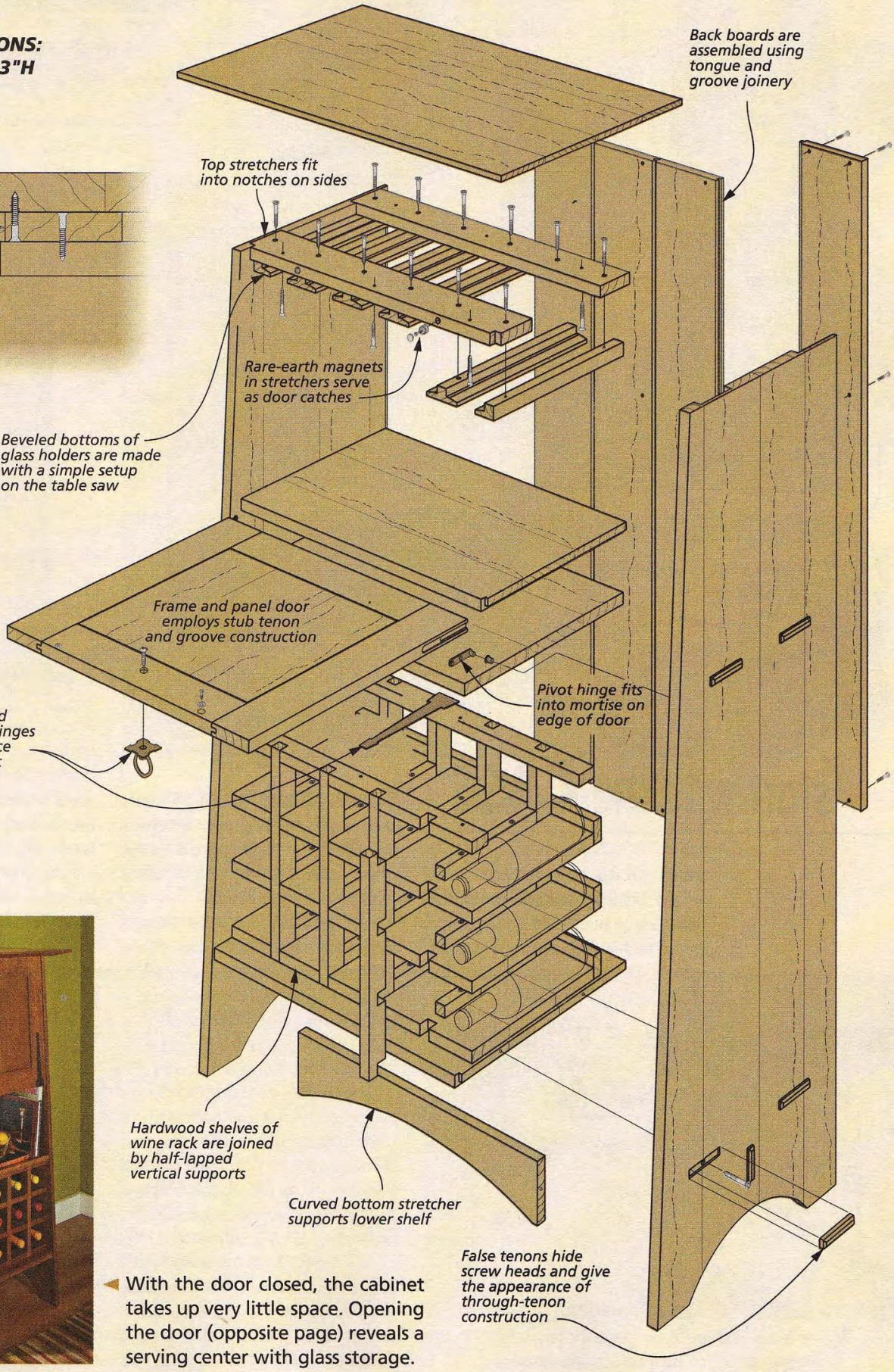

◄ With the door closed, the cabinet takes up very little space. Opening the door (opposite page) reveals a serving center with glass storage.

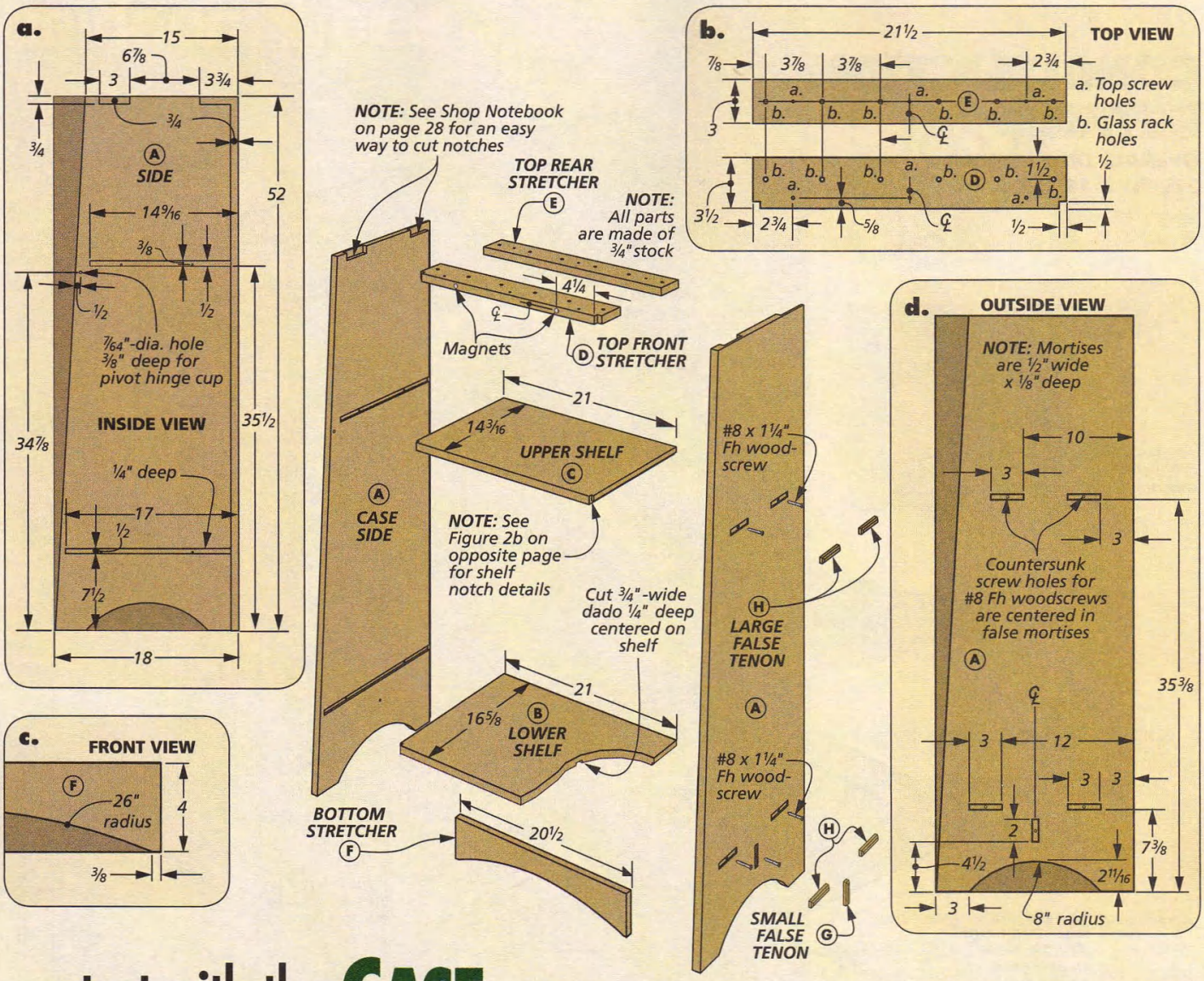

start with the CASE

Making the basic case for the wine server is pretty straightforward. It consists of two fixed shelves and stretchers at the top and bottom attached to the sides. So preparing the sides is the first task.

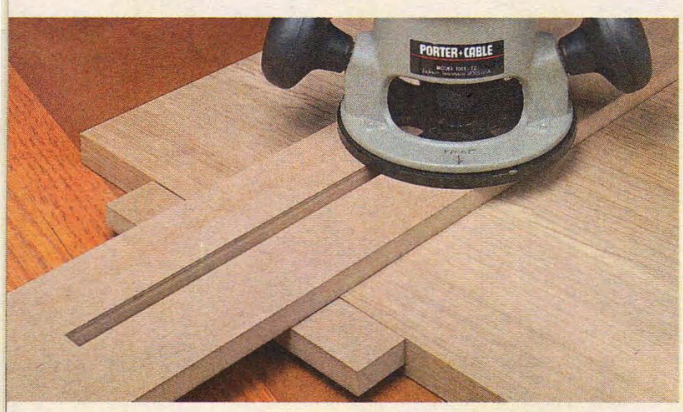

▲ See Shop Notebook on page 28 for details on the shop-built jig for routing stopped dadoes.

GLUE UP THE PANELS. You'll probably need to glue up three or four boards to make the 18"-wide panels for the sides. After smoothing the panels you can cut them to size.

SHAPE THE SIDES. The next step is to cut the taper that runs down the front edge of both sides. The easiest way to do this is to use a straightedge and a circular saw. Then you can clean up the cut with a flush-trim bit on your router.

With the taper cut on both pieces, you're ready to make the round cut at the bottom of the sides. I marked the radius for the cut using a simple trammel. Shop Notebook on page 28 has more information. Then I made the cut with a jig saw.

STOPPED DADOES FOR THE JOINERY. The upper and lower shelves fit into stopped dadoes in the case sides. To cut these dadoes, a router is your best option. This way, all you need to do is lay out the dado and use a simple jig clamped to the workpiece to make the cut.

After completing the cuts, square the ends with a chisel. Then drill holes for the screws that will hold the shelf. While you're at it, go ahead and drill the holes for the pivot hinges on the door as well.

RABBET THE BACK EDGES. Now it's time to add the rabbet on the back edge of the sides. This rabbet will hold the hardwood back you'll add later. For this, I turned to the table saw and a dado blade. I also installed an auxiliary fence, but left the full 3/4" width of the blade exposed to cut the 1/2"-deep rabbet, as shown in Figure 1.

CUT THE NOTCHES. To complete work on the inside of the sides, the last step is to cut two notches at the top of each side to hold the stretchers. Once again, I turned to my router.

I made another simple template to use to guide the bit. (Shop Notebook on page 28 has the details.)

SHALLOW MORTISES. All that remains is to cut the 1/8"-deep mortises on the outside. Since the shelves are actually held with screws, these will house end grain hardwood caps that simulate the look of through tenons (and hide the screw heads).

You can use the technique shown on page 27 to make a router template (just size it for these mortises). The box below shows the process for making the false tenons.

BOTTOM AND SHELF. After gluing up panels for the upper and lower shelves, the next step is to cut rabbets on both ends (Figure 2). They form a tongue that will fit into the dadoes you cut in the sides earlier.

To fit into the stopped dado, you'll need to trim a bit off the front of the tongue, as shown in Figure 2b. The lower shelf also needs a groove in the underside to hold the bottom stretcher. You can cut this groove at the table saw.

STRETCHERS. Now you can turn your attention to the stretchers. I started by cutting the top stretchers and drilling countersunk holes for the screws. You'll need to have countersunk holes on both sides since the stretchers attach to both the top and the wine glass racks.

The notched front stretcher is set back to form a stop for the door. It also requires a 3° bevel on the front edge to match the taper of the sides. This is easy to cut at the table saw (Figure 3). For the bottom stretcher, you can cut the curve on the band saw. Then you can attach it to the lower shelf.

ASSEMBLY. With all the pieces cut and shaped, you're ready to assemble the case. I started by dry-fitting the bottom and center shelf in the grooves. This way, you can adjust the fit of the stretchers by sneaking up on a good fit. Once you have everything properly sized, go ahead and add glue and screws. The bottom stretcher can be added after the glue dries.

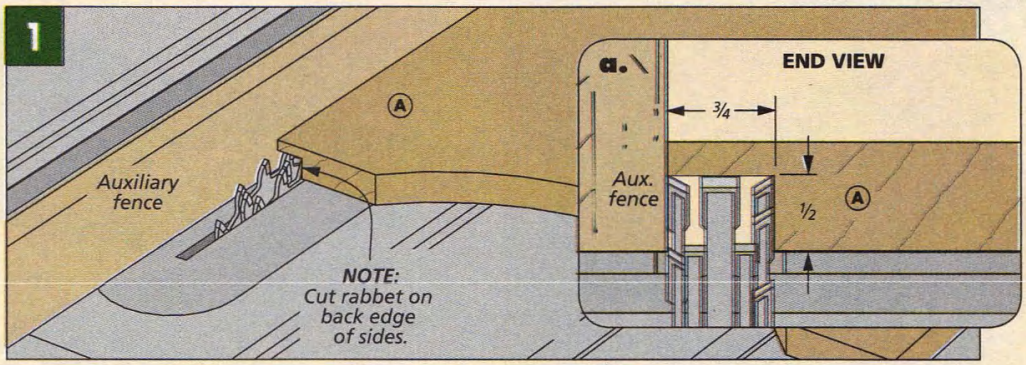

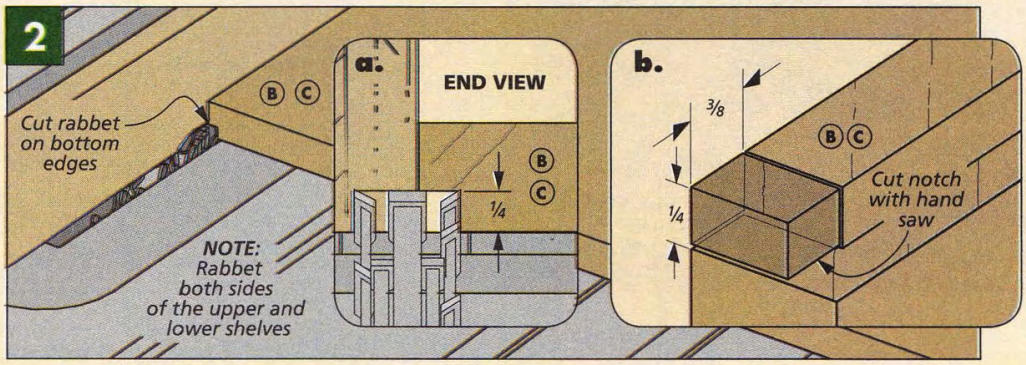

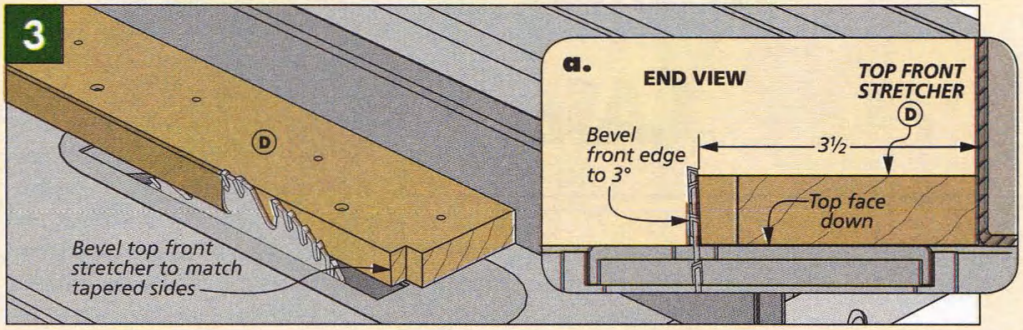

How-To: Make Chamfered False Tenons

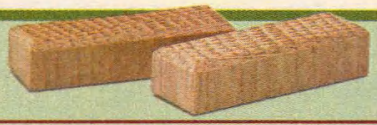

The challenge to making the chamfered false tenons for the wine server lies in their small size. Once they're cut to their final 3/8" length, there's just not much to hold on to when trying to make the 1/8" chamfer on the ends. The solution is to chamfer first, then cut them to length.

I started with a blank of wood sized to fit the mortises and long enough to make all the tenons. At the router table, I chamfered all four edges of both ends. Then I took the blank to the table saw. Here I set up the fence with a stop block in front of the blade to gauge the length and cut each end off of the blank. Now just repeat the process until all the tenons are completed.

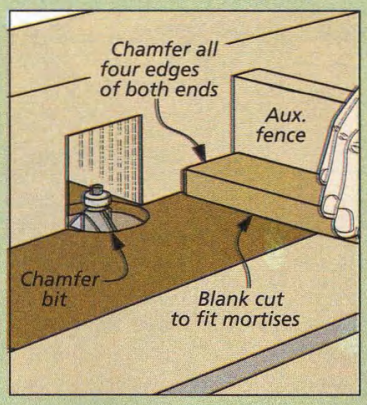

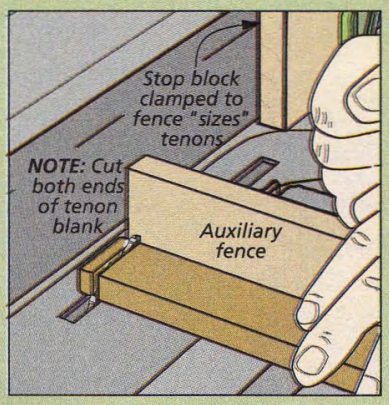

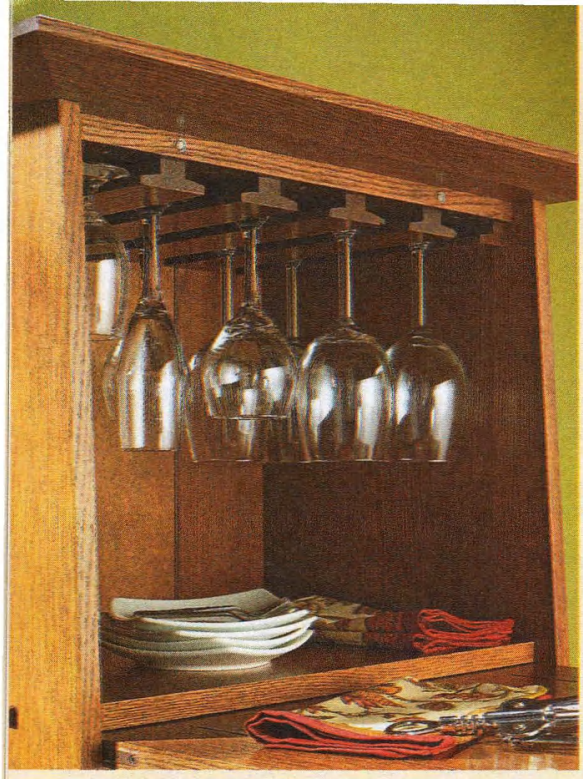

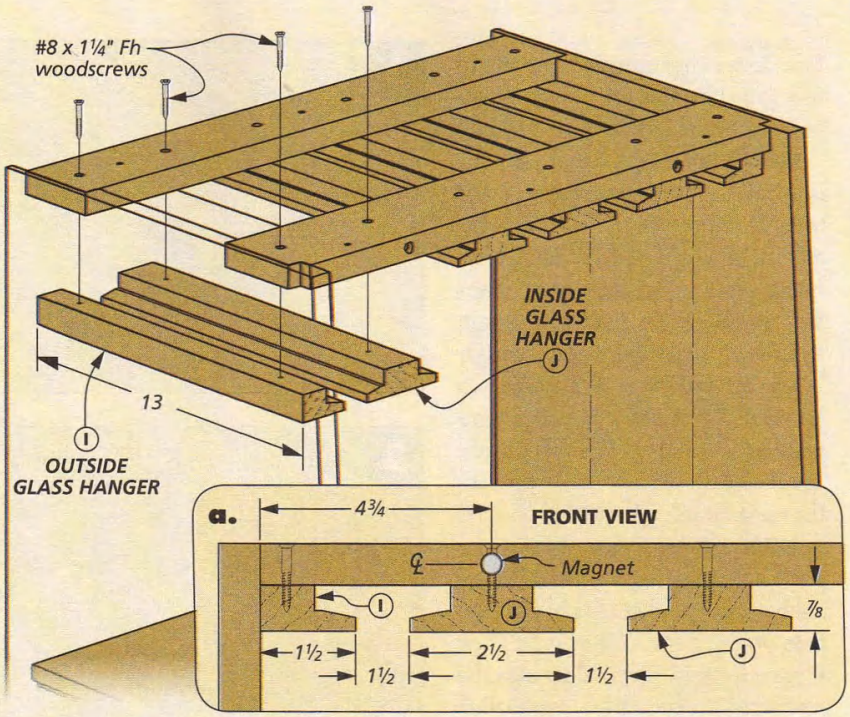

completing the CASE

The top compartment of the server features storage space for plates, bottle openers, and other accessories. There's plenty of room for the essentials you'll want to have ready and waiting for a spur of the moment wine tasting.

But the best thing about the upper compartment is the convenient storage rack for wineglasses. It's made by adding the hardwood glass hangers shown in the photo and illustration above.

THE GLASS HANGERS. As you can see in the drawing, the edges of the glass hangers are beveled to cradle the base of the wineglasses, leaving room for the stem of the glass in between. There are four double-edged hangers in the cabinet and on each end a single-edged end cap, forming five slots for glasses. All the hangers are fastened to the top stretchers with screws.

CUTTING THE BEVELS. To make the individual pieces, you'll start by cutting a kerf on the face. Then you can complete the piece with a bevel cut on the edges. The box below steps you through the process of making the cuts.

After completing the cuts, all you need to do is scrape or sand the saw marks smooth and you're ready to add the hangers to the case. Since you already have the screw holes drilled, it's just a matter of clamping the hangers to the top stretchers while you add the screws.

THE TOP

With the glass hangers in place, you're ready to add the beveled-edge top. Once again, you'll need to glue up a panel for this. After cleaning up the panel and cutting it to size, the next task will be cutting the bevel on the front edge and both ends. For this, I turned to the table saw and a tall auxiliary fence. (The box on the opposite page shows

How-To: Make Wine Glass Hangers

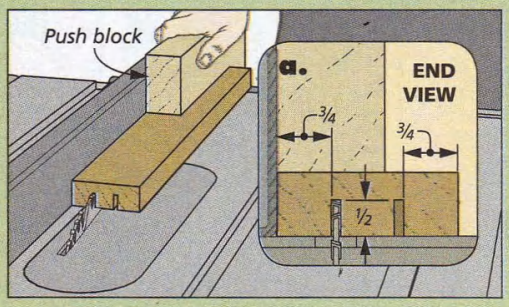

Straight Cuts First. *The kerfs made in this cut establish the thickness of the hangers and make setting up the bevel cut easier.*

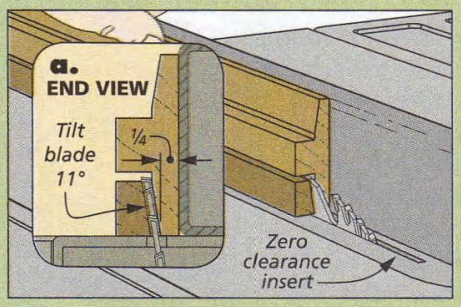

Cut the Bevel. *With the blade tilted to 11° and the fence positioned as shown, raise the blade to intersect the kerf.*

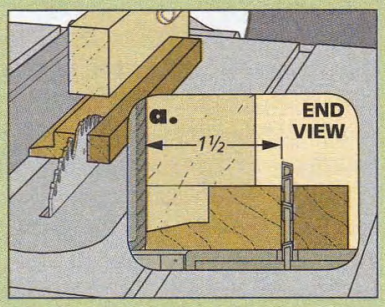

End Hangers. *For the outside hangers, you only need one beveled edge, the other edge is cut square.*

how it's done.) This way, I know I'll have plenty of support for the workpiece during the cut.

I also made sure to have a zero-clearance insert installed to prevent the workpiece from getting caught in the gap as I moved it through the cut. With the fence and insert in place, just set the blade to 30° and cut the 2" bevel on three edges. Use a plane, scrapers, or sanding block to clean up the cuts. Once again, you already have the screw holes in the top stretchers ready to attach the top. Simply add screws.

HARDWOOD BACK

For the back, I decided to use tongue-and-groove hardwood boards. This approach allows for wood movement, gives the piece an authentic turn-of-the-century look, and it's not difficult to make. The box below shows you the details.

TONGUE & GROOVE BOARDS. I started out by cutting the boards to the width and length shown at right. Then, with a standard blade in the table saw, you can cut the shallow grooves in three of the pieces.

Now install a dado blade and auxiliary fence to cut rabbets on both sides of one edge to create the tongue. To complete the look, each piece needs a small chamfer on the edges. For this, I turned to the router table and a V-groove bit.

INSTALLING THE BACK. The joints on the back pieces are not glued. Each board is screwed to the top stretcher and both shelves.

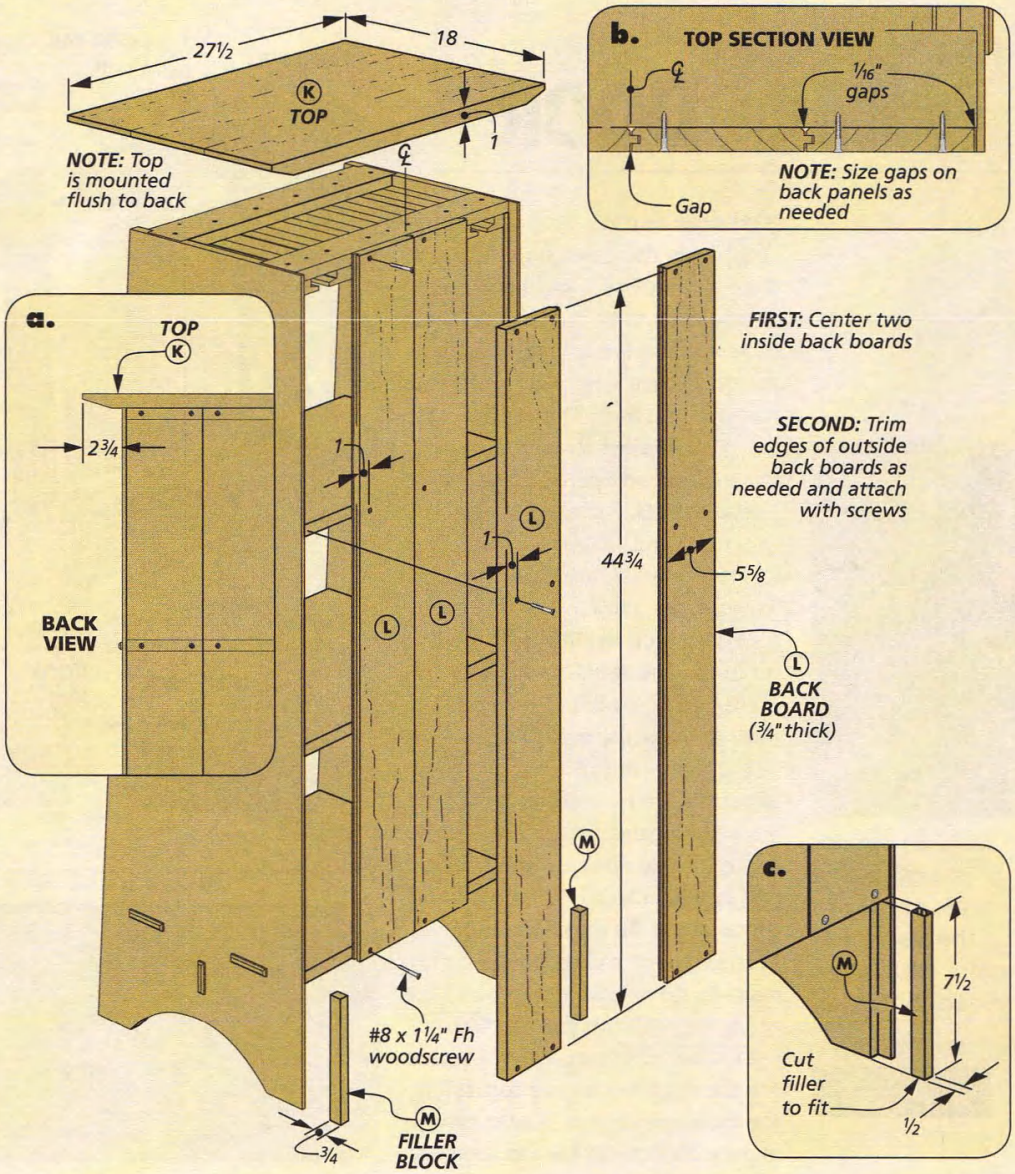

The goal during installation is to make sure the joint between the two center boards lines up with the centerline of the cabinet. You'll probably need to trim the outside back pieces to get a good fit.

FILLER BLOCKS. Finally, a pair of small filler blocks complete the back assembly (main illustration and detail 'c' above). These blocks are glued in the rabbets to fill the gap left after adding the back boards.

How-To: Make the Back and Top

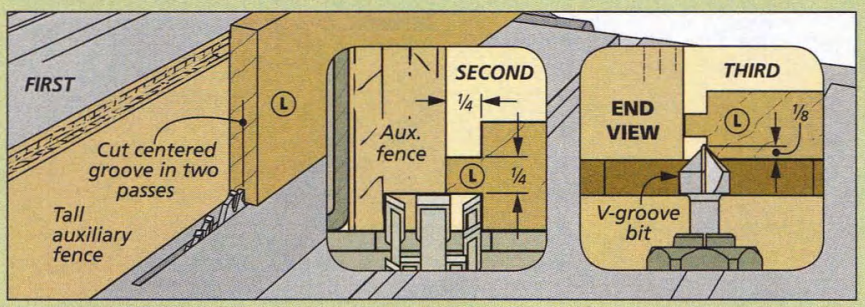

Tongue and Groove Back. *Cut the groove by flipping the workpiece to center the cut. Use a dado blade to cut the rabbets forming the tongue. Routing a small chamfer on the edges of the back boards gives the back a traditional look.*

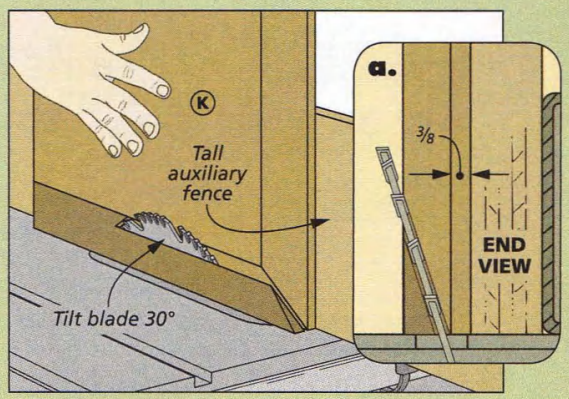

Bevel the Top. *A tilted blade and a tall fence on the table saw allow you to make a consistent bevel on three edges of the top panel.*

adding the DOOR

A simple frame-and-panel door completes the case. But since the door doubles as a worksurface, it needs to be very sturdy. To make sure it was plenty stable, I made the door extra long and used a pin hinge so that the bottom of the door butts up against the underside of the shelf when opened.

RAILS & STILES. I started by cutting the rails and stiles to size. The frame parts all need a ¼" groove to hold the panel. The rails will also need stub tenons to fit into the grooves. The table saw setup for these cuts is similar to the one you used to make the back boards.

The stiles are mortised for the pivot hinges as well. There's also a small second mortise to make room for the rivet on the back of the hinge. Detail 'c' shows the dimensions. To make the mortise, I turned to my router table. All you need to do is add a stop block to the fence and rout the mortise.

Finally, drill a couple of holes for the magnets in the top rail at the locations shown. The magnets align with those in the top stretcher and serve as a door catch.

PANEL. To make the panel, I used ½"-thick stock. Then it's a simple matter of gluing up the panel and cutting a shallow rabbet on all four sides, as shown in detail 'b.'

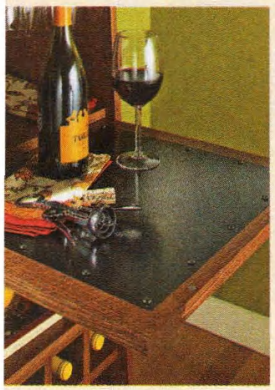

▲ As an option, you can add a brass overlay to the inside. For more details, see Woodsmith.com.

Woodsmith GO ONLINE EXTRAS

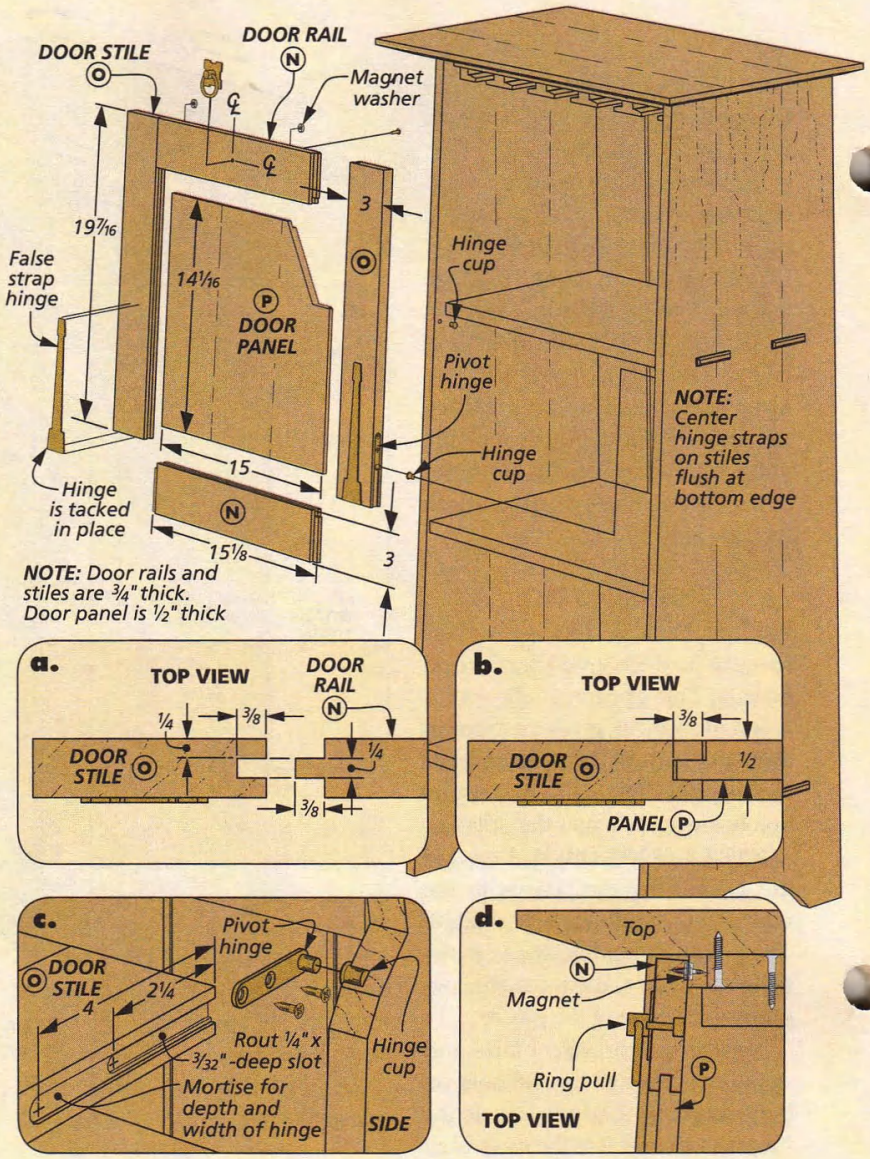

HARDWARE. Attaching the pull is pretty straightforward. Just drill and counterbore a hole for the screw and install the pull. Fitting the hinge and door is a bit tricky. Begin by attaching the hinge cup in the case side. Then slide the mortised door over the arm of the hinge (detail 'c'). With everything in position, just screw the hinge to the door frame.

Materials & Supplies

A	Sides (2)	¾ x 18 - 52
B	Lower Shelf (1)	¾ x 16⅝ - 21
C	Upper Shelf (1)	¾ x 14 3/16 - 21
D	Top Front Stretcher (1)	¾ x 3½ - 21½
E	Top Rear Stretcher (1)	¾ x 3 - 21½
F	Bottom Stretcher (1)	¾ x 4 - 20½
G	Small Mortise Caps (2)	½ x 2 - ⅜
H	Large Mortise Caps (8)	½ x 3 - ⅜
I	Outside Glass Holders (2)	⅞ x 1½ - 13
J	Inside Glass Holders (4)	⅞ x 2½ - 13
K	Top (1)	1 x 18 - 27½
L	Back Panels (4)	¾ x 5⅝ - 44¾
M	Filler Blocks (2)	½ x ¾ - 7½
N	Door Rails (2)	¾ x 3 - 15⅛
O	Door Stiles (2)	¾ x 3 - 19 7/16
P	Door Panel (1)	½ x 15 - 14 1/16
Q	Wine Rack Shelf (3)	¾ x 12 - 20½
R	Wine Rack Top (1)	¾ x 15¾ - 20½
S	Vertical Supports (8)	¾ x 1½ - 13½
T	Horizontal Supports (2)	¾ x 1½ - 20½
U	Dividers (12)	¾ x ¾ - 9
V	Bottle Stops (3)	¾ x 1½ - 20½

- (80) #8 x 1¼" Fh Woodscrews
- (4) #4 x ½" Fh Woodscrews
- (1 pr.) Steel Pivot Hinges
- (1) Angular Ring Pull
- (1 pr.) False Strap Hinges
- (24) Tacks for Strap Hinges
- (2) ¼" O.D. Rare-Earth Magnets
- (2) ⅜" O.D. Steel Cups
- (2) ⅜" O.D. Steel Washers

making the WINE RACK

Now that you've completed the cabinet, it's time to turn your attention to the wine rack. It fits in the lower compartment of the cabinet, but is not fastened in position.

The wine rack consists of three identical shelves, notched at the front and back edges and connected by notched vertical supports. Dividers attached to the shelves with screws fit between the uprights. A panel glued to the top completes the rack and creates a shelf.

START WITH THE SHELVES AND TOP. To begin, I glued up four panels — three for the shelves and one for the top. Now you can move to the table saw and install a dado blade set to ¾" wide. I clamped the three shelves together and stood them on edge to cut the notches, using the miter gauge to keep the cuts square.

VERTICAL SUPPORTS, CLEATS, & DIVIDERS. I used the same technique to cut the notches in the vertical supports and the two horizontal cleats that connect the top. Finally, drill countersunk holes for screws in the locations shown.

The dividers are just small pieces to prevent bottles from moving in the rack. After cutting them to size, you can attach them with screws.

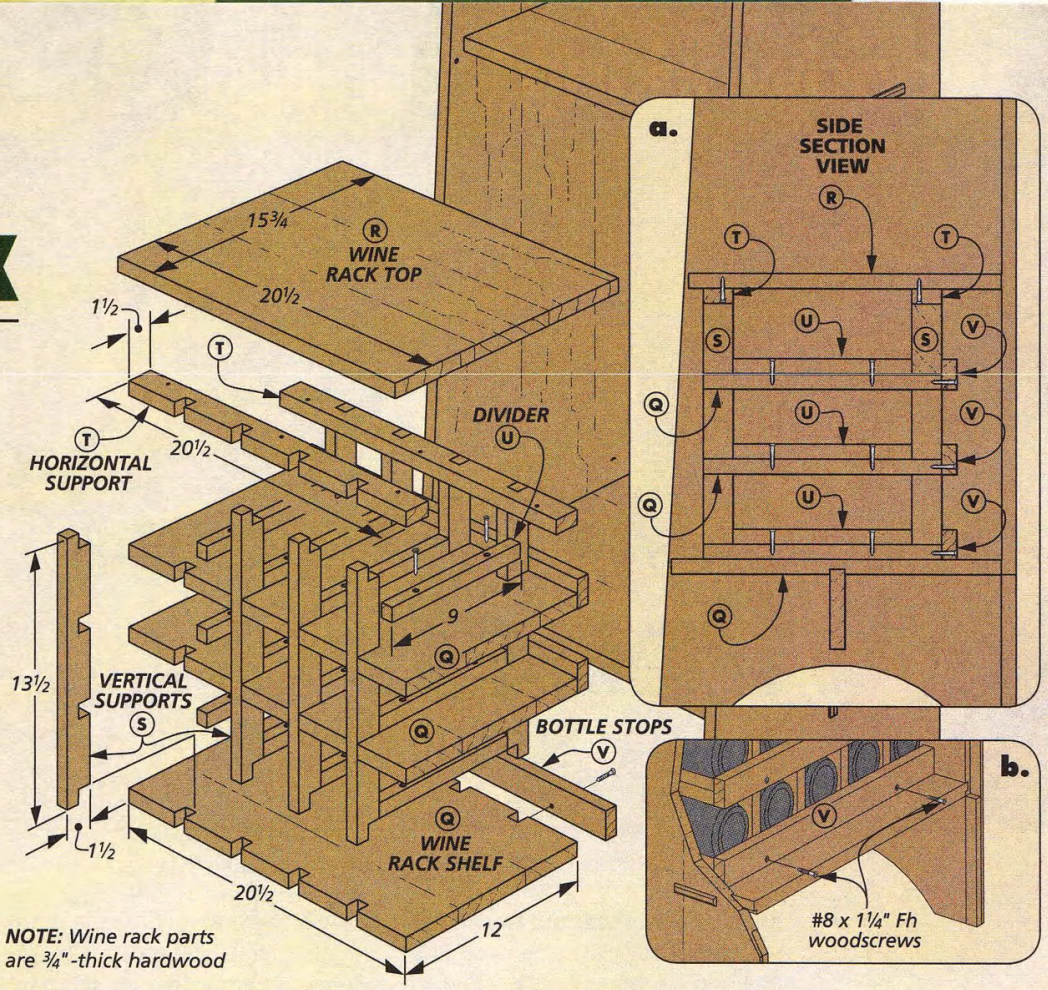

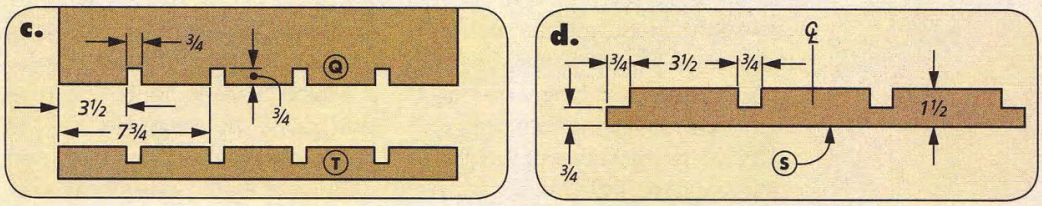

ASSEMBLY. I assembled the rack with glue and screws in the dividers. Then attach the top using screws in the horizontal supports. Adding the stops prevents a bottle from sliding out the back. You can see the way this all comes together in details 'a' and 'b.'

After a final sanding, you can add the finish. This wine cabinet will not only be a hit at parties, but a nice addition to any room. W

Cutting Diagram

¾"x 6"- 60" Riftsawn White Oak (Four boards @ 2.5 Bd. Ft. Each)

A

¾"x 6"- 96" Riftsawn White Oak (4 Bd. Ft.)

A | F | B

¾"x 6"- 96" Riftsawn White Oak (4 Bd. Ft.)

A | B | B

¾"x 6"- 96" Riftsawn White Oak (4 Bd. Ft.)

A | C | C

¾"x 6"- 96" Riftsawn White Oak (4 Bd. Ft.)

A | C | E

¾"x 6½"- 72" Riftsawn White Oak (3.3 Bd. Ft.)

R | R | R

¾"x 6½"- 96" Riftsawn White Oak (4.3 Bd. Ft.)

S | S | T | D | V

¾"x 6"- 96" Riftsawn White Oak (Two boards @ 4 Bd. Ft. Each)

L | L

¾"x 6½"- 96" Riftsawn White Oak (4.3 Bd. Ft.)

N | O | Q | Q | U | U

¾"x 6"- 96" Riftsawn White Oak (4 Bd. Ft.)

Q | Q | Q | Q

¾"x 6"- 72" Riftsawn White Oak (3 Bd. Ft.)

Q | Q | Q

1"x 6½"- 96" Riftsawn White Oak (5.4 Bd. Ft.)

K | K | J | J | I

1"x 6"- 60" Riftsawn White Oak (3.1 Bd. Ft.)

K | K

½"x 6½"- 54" Riftsawn White Oak (2.4 Sq. Ft.)

P | P | P | H | G | M

gluing up Large Panels

Approaching panel glueups in a different way can save you time and effort and give you better results.

Most case projects built from solid wood start with gluing up and surfacing the wide panels needed to make the parts. And the success at this stage can determine how the project goes from there on out. If your panels are smooth, flat, and accurately thicknessed, the rest of the work gets much easier.

The usual procedure is to glue up a panel to "rough" thickness and then surface it to your specs. If you have a wide planer or a drum sander in your shop, this is easy to do. But most of us don't have this luxury. And in this case, the work of surfacing a panel after glueup can be a trial. The tedious hand-planing, belt sanding, or scraping can make you think about taking up a less strenuous hobby.

REVERSE THE ORDER. To get my projects off to a smoother start, I tried approaching panel glueups from a different angle. I simply reverse the order of things. Briefly, the technique goes like this: I start by surfacing all the boards to final thickness. Then I lay them out, joint the edges, and very carefully glue up the panel one joint a time. This "extended" glueup allows you to concentrate on getting each joint perfectly flush, flat and tight. Admittedly, the process of gluing up all the joints takes a little longer, but you easily recoup time by having to do very little cleanup to the panel afterward. And the panels usually turn out flatter, smoother, and better looking.

FIRST, THE BOARDS. I start by choosing stock for the panel and cutting the boards to rough width and length. You want a couple of inches extra length in the glued up panel and an extra inch or so in width for final sizing. It helps to start with the straightest boards possible. They don't have to be perfect, but the straighter the better.

SURFACE. Next, I joint one face of each board and then plane them to final thickness. Normally, I would leave the boards a little thick for "post-glueup" surfacing, but not here. You want the thickness to be dead-on (Figure 1).

LAY OUT THE PANEL. Once all the boards are planed, I take them to the bench. Before I joint the edges, I do a little mixing and matching of the pieces. I have two goals that sometimes require a compromise. You want

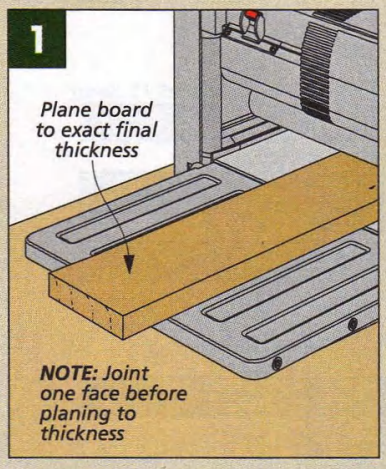

Plane First. *After cutting the boards to rough length, plane them to the final thickness of the panel.*

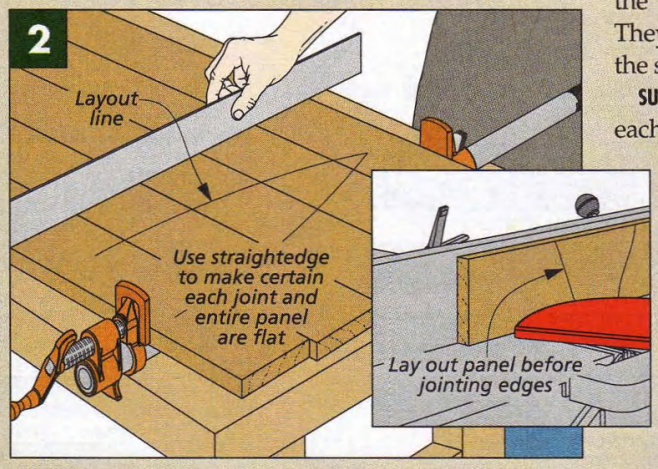

Joint and Dry Clamp. *After laying out the boards and jointing the edges of the boards, dry clamp the panel and use a straightedge to check it for flatness.*

to arrange the boards in the panel to achieve the best figure and color match, but you also want the panel to be flat and straight.

If your boards are all pretty straight, you can arrange them strictly for appearance. But more often, a board or two is slightly bowed. This can be straightened by placing the board in the center of the panel, using a straight board on either side to counteract the bow.

I always place a straight board at either edge of the panel, then any bowed boards go to the inside. If two bowed boards have to be placed side by side, reverse the bow in each piece so it cancels out.

JOINT & DRY CLAMP. When I'm satisfied with the lineup, I mark the order of the boards and take them to the jointer (Figure 1). After jointing each edge, the next step is to dry clamp the panel to make sure that the joints are tight, lie perfectly flat, and are also easy to align (see Shop Tip below). It pays to check each joint as well as the entire panel with a straightedge, as in Figure 2. You don't want any humps or dips at the joints. If you need to rejoint an edge, do it now, before you start gluing up the boards.

GLUE ONE JOINT. When the panel passes the dry clamp test, you can get ready to glue up the first joint. I like to start at one side and work my way across the panel.

Figure 3 shows the clamping arrangement. First I lay out a series of clamps and adjust them to the width of the boards. I also prepare an upper set of clamps to alternate with the lower set. You'll need to have pads on your clamps or cauls ready to protect the jointed edges.

After spreading glue on one edge, align the boards on the clamps and rub them together. There should be enough glue on the edge to keep the boards in contact.

END CLAMPS. Before tightening the main clamps, I add a small clamp at each end to keep the two boards flush. Then I add the upper clamps and begin to tighten all the clamps. Remember, you're only gluing one joint so don't overdo it.

CHECK FOR FLUSH. While the clamps are being tightened, I'm feeling the joint for flush. If you find an offset along the joint, a dead blow mallet can be used to force the high side down. You may have to loosen the clamps to get the boards to move. If you find a hump or dip with your straightedge, adjust the clamps to change the pressure. Since you're only gluing one joint, it's not a panic to make these adjustments.

A SHORT WAIT. The next step is to wait while the glue sets up. This doesn't take long. After about 30 minutes, the joint will be strong enough to loosen the clamps and add another board. At this point, I also scrape off the gummy glue squeezeout (Shop Tip below).

MORE OF THE SAME. The next joint goes just like the first. Again, the key is to make sure the joint is dead flush and lies flat. And you simply repeat the process until you've completed the panel (Figure 4).

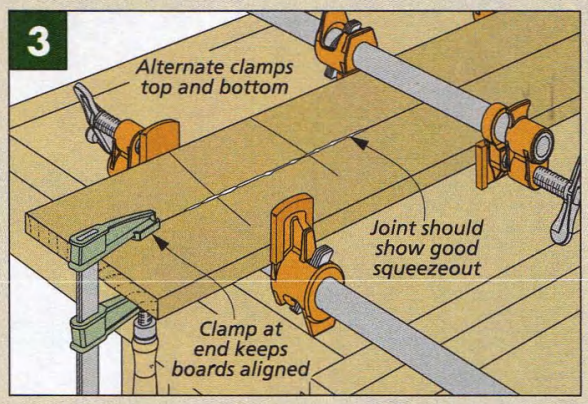

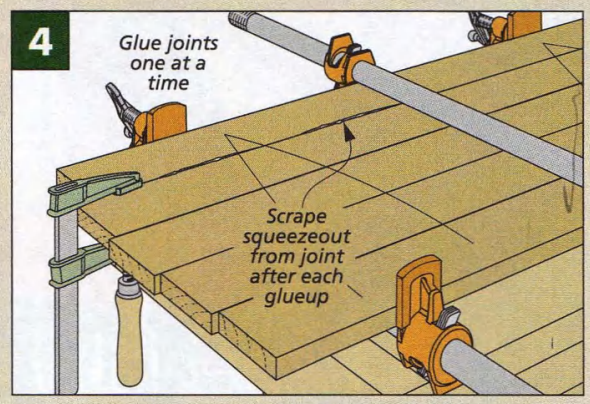

FINISH UP. I let the panel sit for several hours before the final step. When the clamps come off, I simply pick up a hand scraper and spend a few minutes removing any remaining glue squeezeout and touching up the joints (main photo, opposite). A little fine sanding finishes the job.

To me, this technique proves that a little patience and planning can sometimes eliminate the need for a lot of hard work.

Shop Tips: Biscuits and Scraping Soft Glue

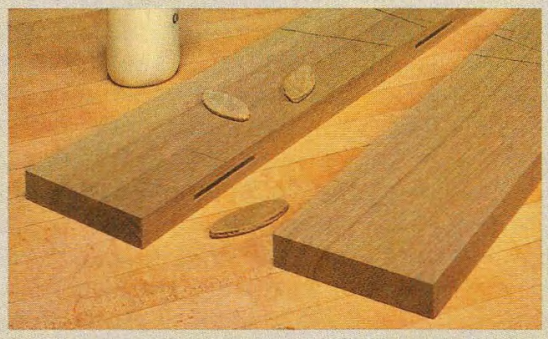

▲ If you think you're going to have trouble keeping long or bowed boards aligned, adding biscuits to the joints can help.

◄ Scrape the joint before adding the next board and the gummy glue squeezeout will come off cleanly and easily.

10 specialty Router Bits

These specialized bits may not currently be in your tool cabinet, but they can provide easy solutions to some tough woodworking tasks.

▼ One look is all it takes to see that these specialized bits are anything but ordinary.

It seems with every project I build, I find myself doing more and more of the work at the router table. And that shouldn't be a surprise when you consider the wide array of bits available. Couple that with the quality and power of today's routers and you have a combination that allows you to do just about anything. And router bit manufacturers keep coming up with new ideas that allow you to tackle even more challenging tasks.

SPECIALIZED BITS. Here's a look at some of my favorite specialized router bits. They range from straight bits for cutting dadoes that match the actual thickness of plywood to a handy flush-trim bit that leaves a dead-smooth edge. You'll also find bits for making seamless joinery. Lastly, a new set of bits from *Amana* offers a practical way to make the nicest-looking tambour (think roll-top) you'll ever see.

These might not be bits you'll reach for every day in your shop. But they all offer an easier, and more accurate solution to some of woodworking's tougher operations.

PROPER USE. Before going any further though, I want to make it clear that most of these bits are for use in a router table. The exceptions are the dado bits, the T-slot cutter, and the down-shear flush trim bit.

I'd also like to point out that for the sake of safety, you'll want to use featherboards and push-sticks with most of these bits. This is especially true when you're working with thin or narrow stock. Featherboards hold your workpieces firmly against the fence (or table) and help prevent a workpiece from drifting and ruining a cut.

Most of these bits aren't available at your local home center. But you can find out where to get them in Sources on page 51.

Locking Miter Bit

Mitered corners can be a challenge. Even when you cut them perfectly (which isn't easy), you're still faced with the problem of a slippery, end-grain glue-up. Adding a spline to strengthen the joint is a good solution. But that means more cutting and even fussier setups on the fragile edge of the workpiece.

That's why a locking miter bit is a great investment. It not only guarantees a perfect miter, but it also shapes a "finger" and matching groove to lock the two halves of the joint together. The photos at right show you what I mean.

To cut the joint, all you need to do is run one piece flat (horizontally) on your router table, then run the matching piece vertically against the fence. The pieces fit together perfectly. And the profile provides plenty of glue surface for a long-lasting joint.

SETUP BLOCK. Once you get the bit set up, it only takes a few seconds to rout the joint. And to make this easier, most manufacturers offer an inexpensive setup block to match the bit. I strongly recommend buying one. It makes dialing in the bit height a breeze.

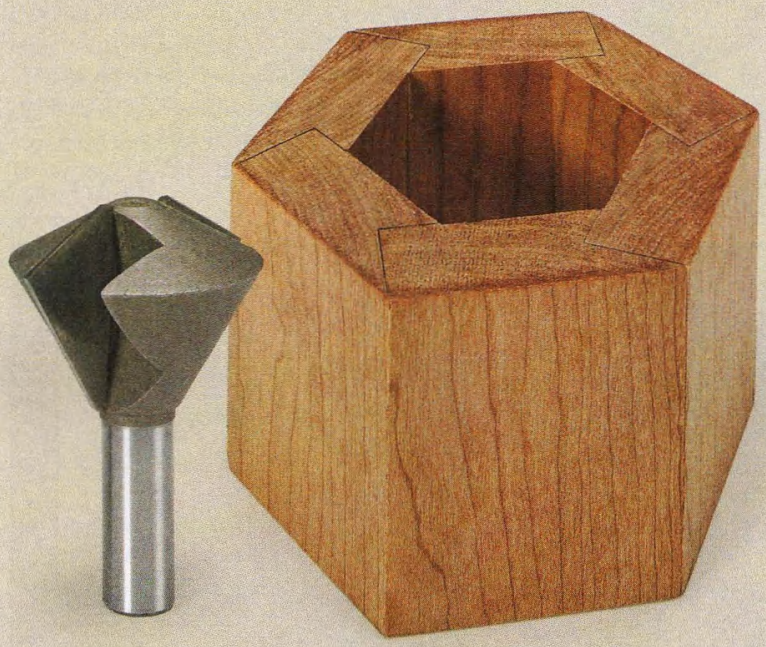

Glue Joint Bit

When it comes to six, eight, or twelve sided assemblies (like columns or planters), forget about fussy table saw setups and the endless test pieces to fine-tune a joint. Instead, you might want to invest in a router bit specially designed for the job. There's simply no easier or more accurate way to cut the angles for these joints than with a glue-joint bit. And you can find a bit designed for each of these angles.

EASIER GLUE-UP. But accuracy isn't the end of the story. As you can see in the photo at left, by cutting only one edge of a workpiece, the bit forms a perfect pocket for the square edge of the mating piece. This means plenty of glue surface and no slipping when you assemble the joint.

T-Slot Cutter

T-slots can be useful for a wide variety of projects. On the small end, T-slots used with flange bolts are a great way to make adjustable hold-downs for shop-built jigs.

On a slightly larger scale, T-slots have become a popular way to add adjustable storage to a room (or shop), like the wall-hanging system shown at right. With a good selection of hangers, shelf brackets, and other accessories available, it's an attractive and very practical alternative to pegboard and hooks. But buying the pre-slotted plywood panels can be very expensive.

The good news is, it's pretty easy to make your own. All you need is the bit shown at right and a router.

To use one of the smaller T-slot bits, you'll need to cut a groove first, to provide a path for the shaft of the bit. But the bit shown here features cutters on the shaft. This means you can skip cutting the groove and go straight to routing the slot.

Just be sure to keep the router flat against the workpiece when using this bit. If it raises up, you'll ruin the slot.

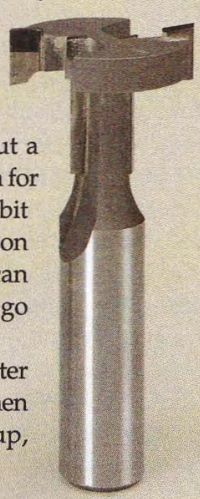

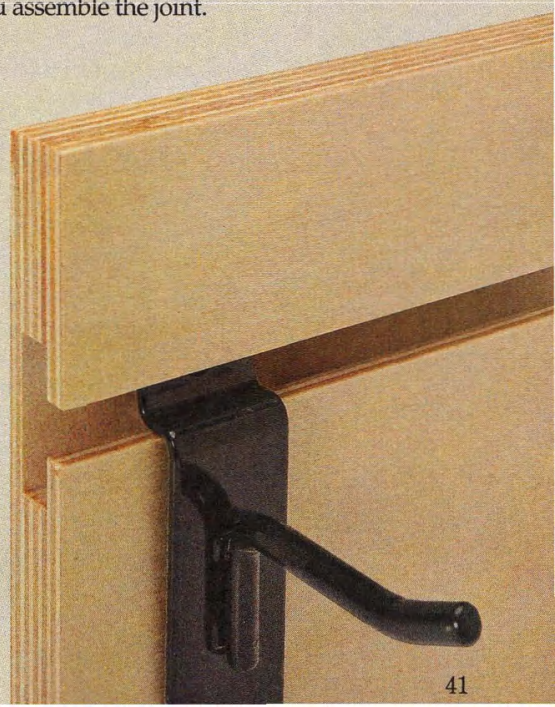

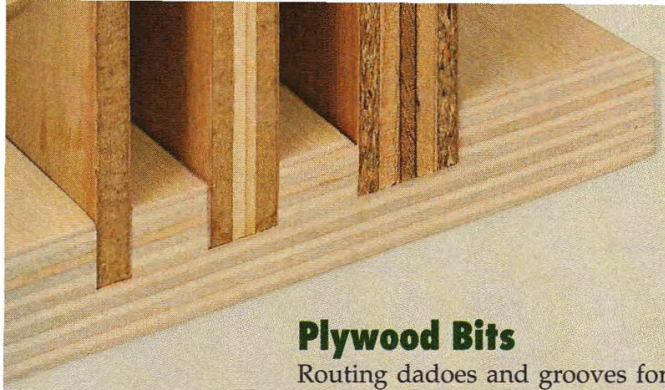

Plywood Bits

Routing dadoes and grooves for plywood projects can be a challenge since the nominal thickness of the plywood is rarely the actual size. That's why these inexpensive bits can really make life easier.

Sized at 15/64" for 1/4" plywood, 31/64" for 1/2", and 23/32" for 3/4", they match up with the actual thickness of most cabinet-grade plywood. As the photo above shows, these dadoes create a gap-free joint for shelves or other plywood project parts.

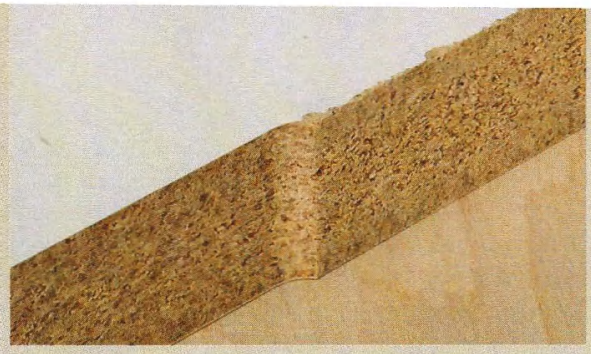

Down-Shear Flush Trim Bit

Flush trim bits make cleaning up a cut with a straightedge or routing with a template a breeze. But in some materials, like veneered plywood or the melamine shown in the photo above, chipping or tearout can be a nagging problem.

THE DOWN-SHEAR SOLUTION. That's why it's worth looking for a down-shear cutter next time you're shopping for a flush trim bit. As the name implies, the cutting edges are angled to slice down at the surface.

This motion eliminates chipping since the veneer is backed up by the substrate of the material and the bottom is backed by a template or straightedge. And best of all, these bits don't cost any more than the straight-sided flush trim bits you're used to.

Dado Cleanout Bit

A dado blades on the table saw is easy to use. But it can leave an uneven bottom on the cut. And when you cut dadoes for joinery, the bottom needs to be flat or you'll end up with a gap (first photo at right).

Fortunately, there's an easy fix. The dado cleanout bit features a bearing that rides along the shoulder of the dado. The shear-cutting blade creates a perfectly flat bottom. Best of all, this is an inexpensive bit (under $15), so it should be in everyone's collection.

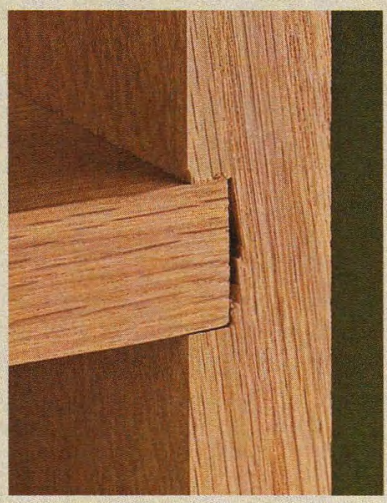

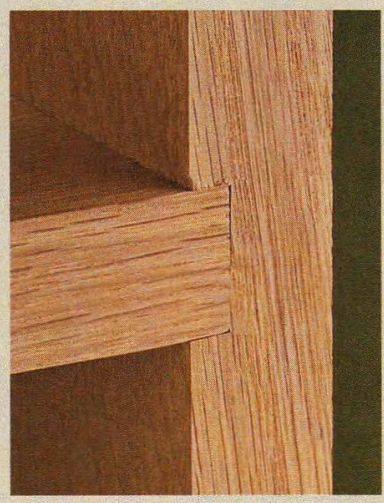

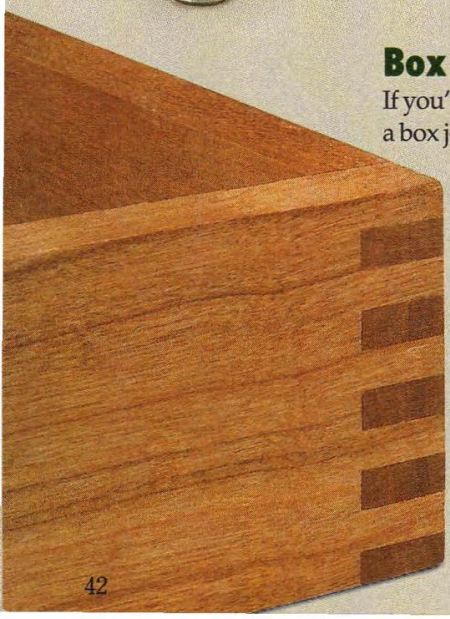

Box Joint Bit

If you've ever struggled to fine tune a box joint jig on the table saw, then you know how frustrating cutting this popular joint can be. This bit eliminates the guess work. As you can see in the photo at right, the bit is really just five slot-cutting bits. They're stacked on a shaft, separated by spacers.

In spite of its intimidating appearance, this bit is a pleasure to use. And while you're limited to stock that's 1/2" thick and 1 1/2" wide, that's still big enough to handle small boxes and drawers.

To use the bit, you'll need a miter gauge and backer board for your router table. You can make matching parts by cutting two workpieces at one time. To assemble the parts, flip one over and they'll fit together like a hand in a glove.

Cutting perfect-fitting box joints safely and successfully has never been easier than with this bit.

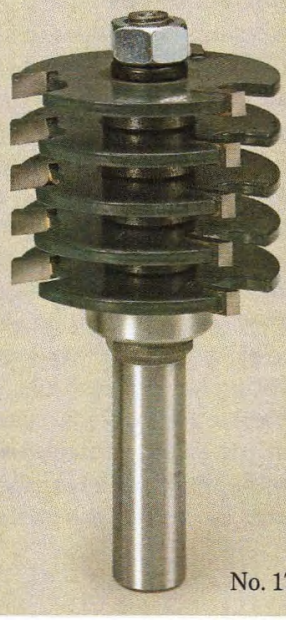

What's New: Tambour Bit Set

I really like roll-top desks, but I was never happy with the conventional method of gluing strips of wood to a canvas backer to create a flexible roll-top. The resulting tambour door can become stiff and difficult to bend. And if any of the strips slip out of position when you apply the glue, there's just no easy way to correct the problem later.

Amana's new locking tambour bit set offers an interesting alternative. The photo below shows the three-bit set. The two larger bits are used to make the interlocking profile. The third bit in the set is just a small roundover bit used to soften the edges of the last slat that often incorporates a handle or pull.

INTERLOCKING TAMBOUR. The photo in the lower right corner of the page shows you the finished product. You can see how the individual pieces of the tambour lock together using a ball-and-socket joint. This alleviates the need for a canvas backer to hold the slats.

SETTING UP. I have to admit that when I first headed to the shop to try these bits out, I anticipated a long and tedious setup. I couldn't have been more wrong. The illustrated instructions were clear and accurate, spelling everything out. In fact, I completed my first tambour door in under an hour.

START WITH THE STOCK. Successful setup begins with properly milled stock. The bit set is designed to produce a ½"-thick tambour to ride in a 9/16" groove in your cabinet, desk, or other project. To get started, you'll first need to plane your stock to ½" thick. Then rip the stock into 1 15/16"-wide workpieces.

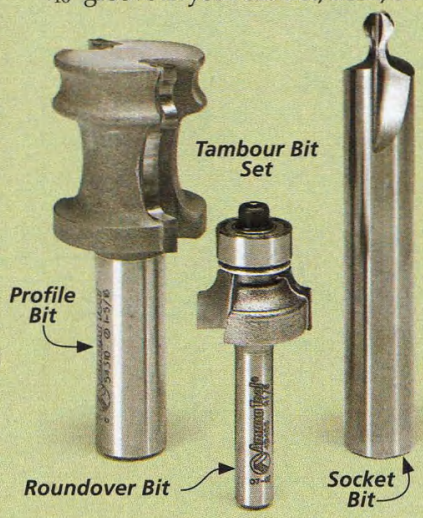

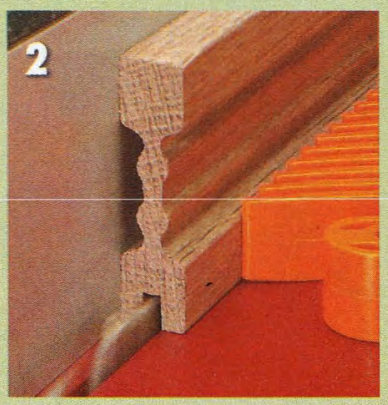

1. Starting with an oversized workpiece, make two passes on both sides to form the profile.

2. A kerf cut on the table saw paves the way for routing the socket.

3. The ball-shaped bit forms the socket that will house the matching ball.

4. Complete the tambour by ripping the oversized workpiece down the middle.

Each blank will yield two completed tambour slats. The oversized workpiece is also much safer to work with. It's a good idea to cut a few extra blanks to use for setting up the router and fence.

I started by setting the fence so the inside edge of the large, shaping bit barely made contact with the workpiece. Then you'll need to raise the height so the bottom edge of the workpiece just kisses the cutter. Step 1 above shows this setup.

ROUT THE PROFILE. With the workpieces prepared and the router table set up, you're ready to start routing the slats. The step-by-step photos above outline the process. For both safety and accuracy, make sure to use a featherboard.

After making the first cut, you simply flip the blank end-for-end and rout the other edge. Then repeat both cuts on the opposite side. You'll see the two slats take shape (separated by a flat spot) after the last pass.

KERF CUT THE EDGE. Now you're ready to move to the table saw and make a small kerf (Step 2). This cut reduces the strain on the ball-shaped bit you'll use next to cut the socket.

ROUT THE SOCKET. Back at the router table, it's a pretty simple setup for Step 3. You just adjust the fence to center the bit on the workpiece and rout the socket.

SEPARATE THE SLATS. Now all you need to do is head back to the table saw and cut the oversized workpiece down the center. You can easily see the location for this cut by aligning the flat spot left between the two balls with the saw blade.

A little sanding is all it takes to produce an attractive and smooth sliding tambour door. W

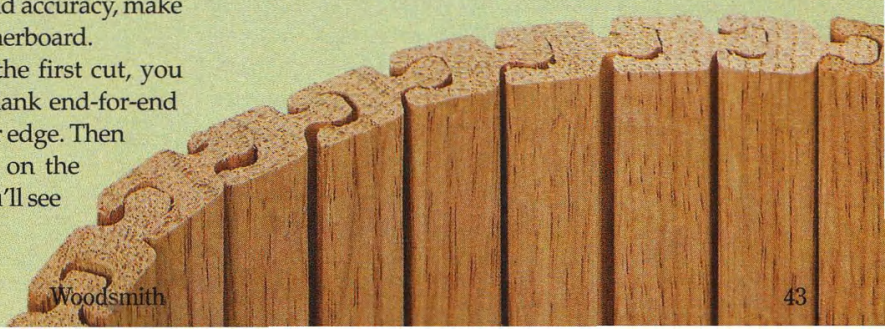

dealing with Dust

Keep the dust out of the air and off the floor by using these handy, shop-made collectors.

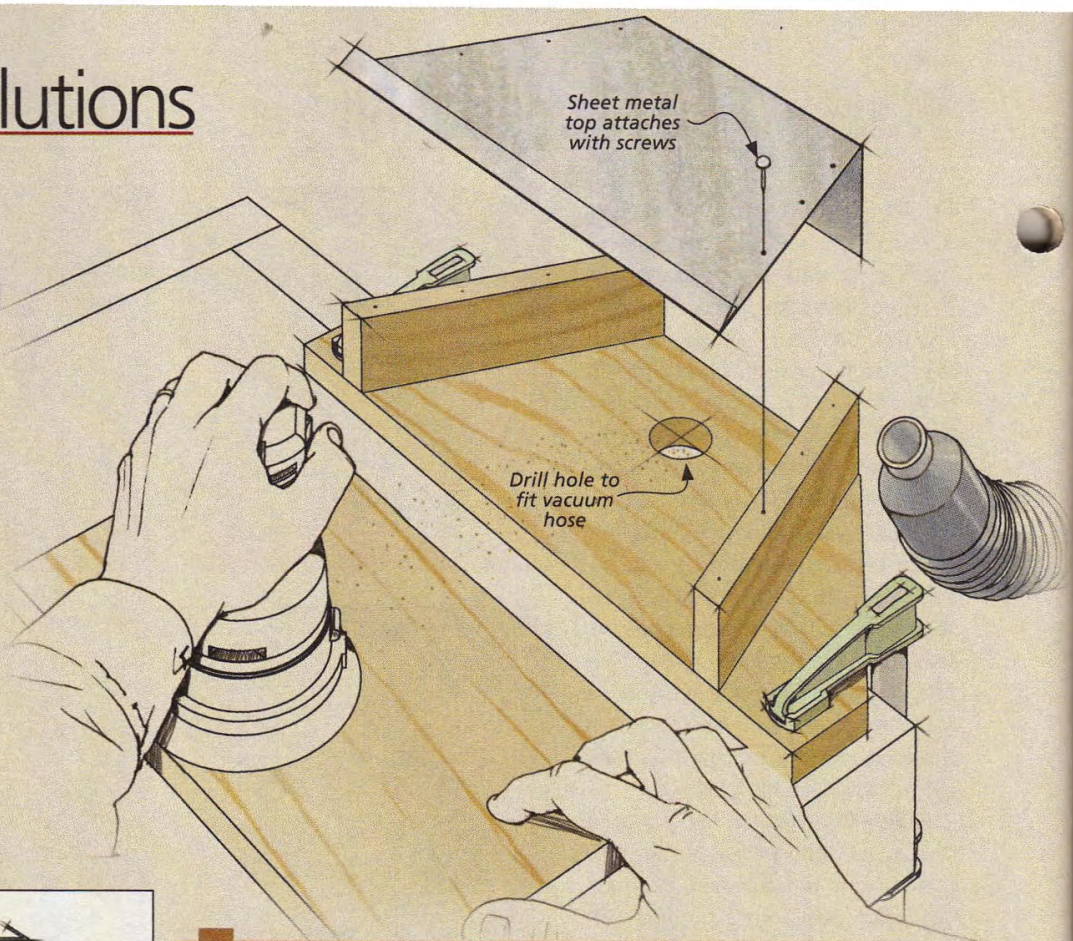

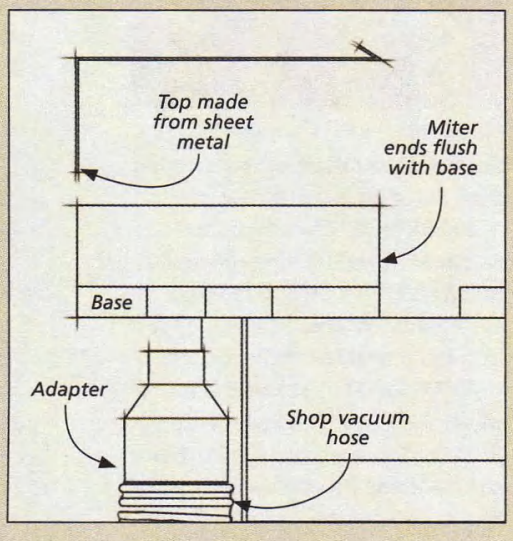

1 Benchtop Collector

A random-orbit sander makes short work of tedious sanding chores. Unfortunately, it also creates a real dust problem.

To capture this dust, I made the simple benchtop pickup shown above. The pickup works like a funnel. As you sand a workpiece, the dust is drawn into the mouth at the front and channeled to a vacuum hose by the two converging sides. You just hook it up and clamp it to the bench when sanding.

You can size the collector to fit your bench or sanding table. The base should be big enough to hold the tapered pickup and still have room for clamping it to the bench. Drill a hole on the back of the base to fit your shop vacuum hose.

You'll need to miter the ends of the side pieces to fit flush on the front and back of the base. Then it's just a matter of bending some light-gauge sheet metal to fit over the sides and connect to the base.

2 Table Saw

Nothing creates dust like a table saw. And even with a dust collector attached to the saw, there's still a fair amount that ends up blowing back in your face.

To collect this dust, I modified the blade guard to double as a dust collector by adding a vacuum hose adapter, as shown in the drawing at right. I also added a block to the front of the blade guard to improve suction. To keep the hose out of the way, just attach a hook to the ceiling. Now the dust goes into the vacuum instead of in the air.

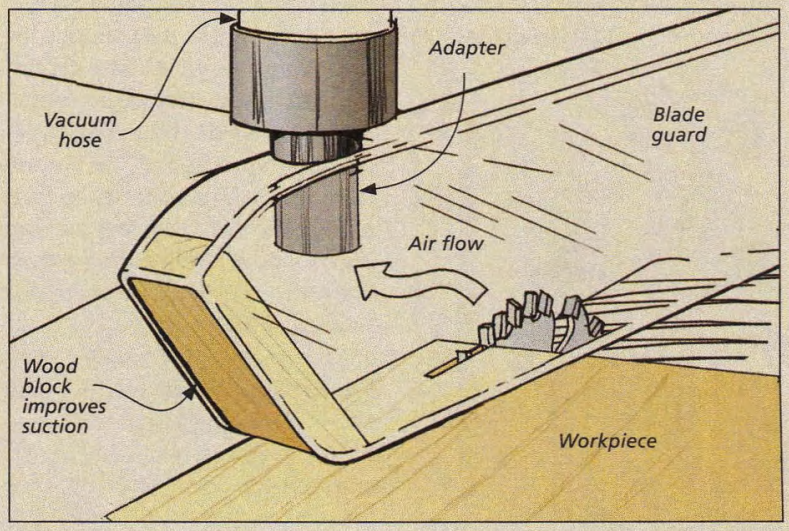

3 Drill Press

Sanding drum kits for the drill press are a great way to smooth curves and odd-shaped pieces. To collect the dust at the source, I slip the hose of my shop vacuum into the bracket shown at right.

The bracket is a keyhole-shaped yoke made from ¾" plywood that holds the vacuum hose. A metal hose clamp secures the yoke to the column of the drill press.

These parts are held together with a carriage bolt and wing nut. The bolt passes through a hole in the hose clamp into another hole in the end of the yoke. This allows you to tilt the yoke and adjust the position of the hose as required for nearly dust-free sanding.

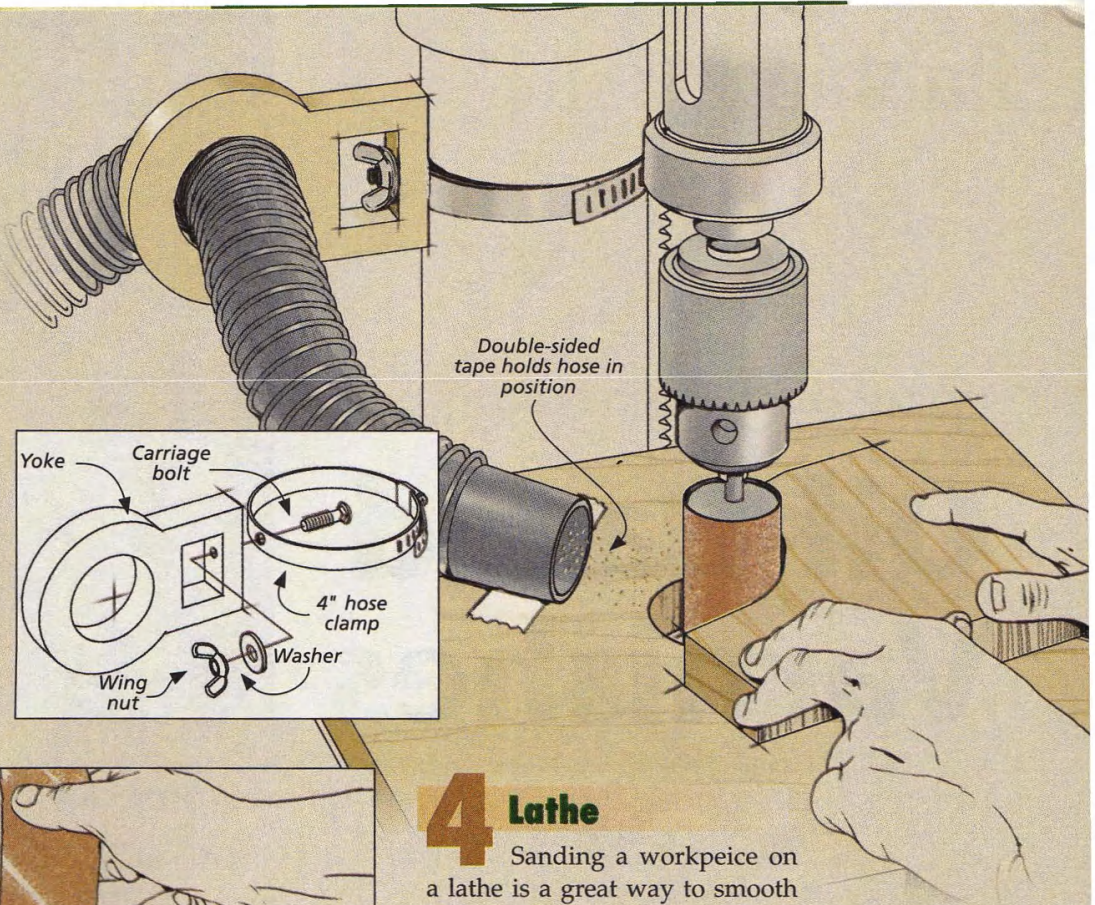

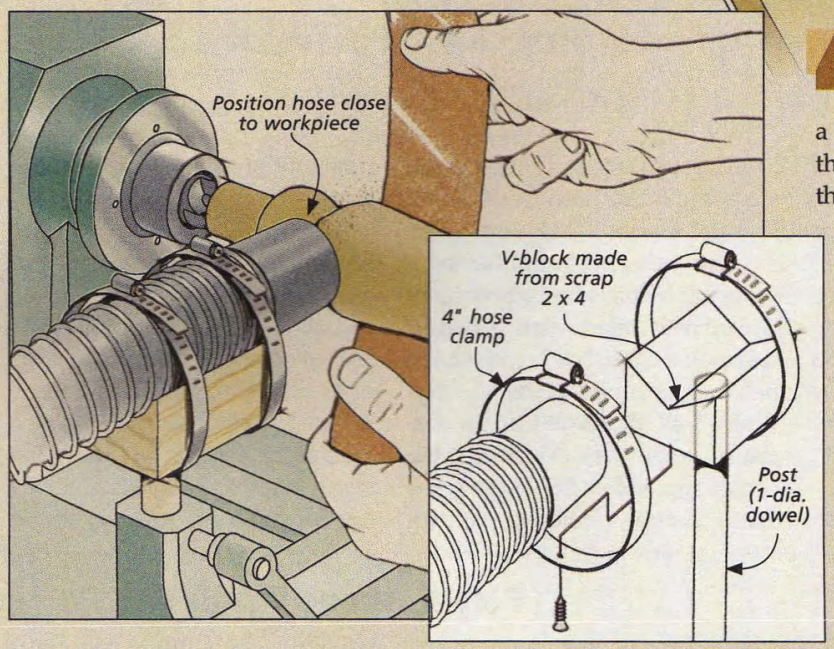

4 Lathe

Sanding a workpeice on a lathe is a great way to smooth the surface. But it also produces a thick cloud of dust. To catch it at the source, I made a simple dust pickup that holds the hose for my shop vacuum close to the spinning workpiece.

The pickup is simply a hardwood body with a V-shaped notch attached to a dowel. A vacuum hose fits in the notch and is secured with hose clamps. The dowel is sized to fit into the lathe's toolrest. This way, you can position the hose right where you need it.

5 Router Table

The router table produces dust and chips that collect both above and below the table. To pick up chips from both places with one dust collection hose, I built the box you see at right. You can easily adapt it to fit your router table.

The idea is simple — the box has a narrow opening at the top to pull in chips from the router base. A hose going from the box to the fence gathers chips on the top side.

I built the dust box out of plywood and sheet metal. Just cut the holes to fit your dust collector and you're up and running.

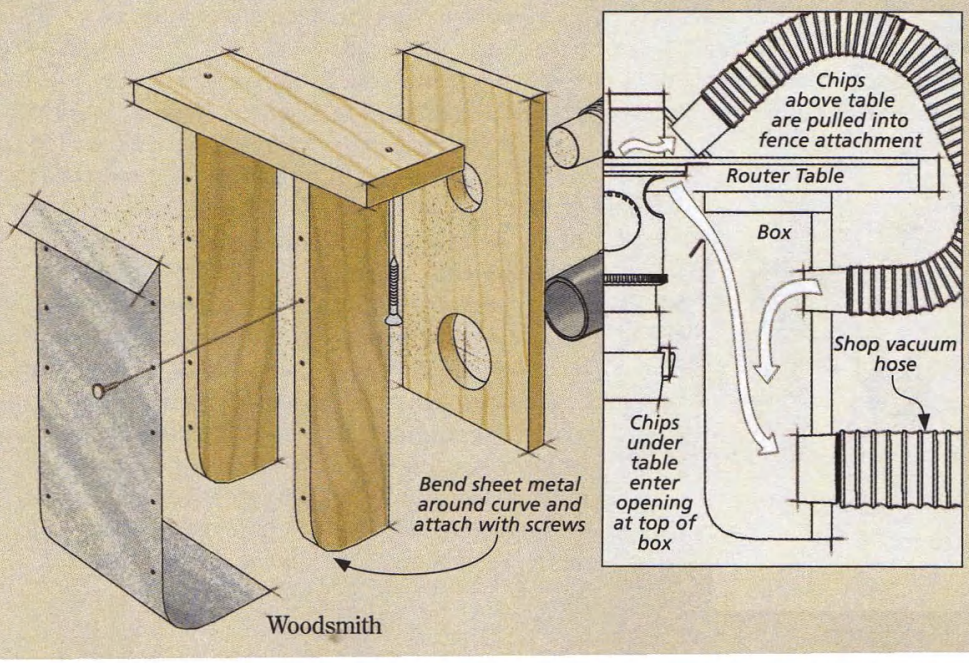

making sense of Oil-Based Varnishes

Choosing the right varnish for your project is just a matter of knowing a little bit about the "players" and what each one offers.

Oil varnish is probably the most popular and readily available type of wood finish. And there are good reasons. First, you get an excellent level of protection. Second, the amber color of varnish enhances the appearance of most woods. And on top of this, oil varnish offers easy application as well as a range of formulations for different uses.

This last fact can lead to some confusion. When you go to the hardware store or home center shopping for a finish, you'll often find the shelves filled with different types of varnish. But having a number of choices isn't a bad thing. Armed with some basic knowledge, selecting a varnish to bring out the best in your project is easy.

WHAT'S AN OIL VARNISH? To understand the choices, let's start at the beginning and talk about what distinguishes oil-based varnish from other finishes. In pretty basic terms, an oil varnish is a mixture of three ingredients: a drying oil (usually linseed, soy, or tung oil), a resin or combination of resins, and a solvent (often mineral spirits). The oil and resin are "cooked" or modified to form the base of the varnish. This oil/resin combination is the part of the finish that creates the durable film. The solvent (called the vehicle) simply

Alkyd Varnish

For many years, alkyd varnish was the standard interior varnish. Alkyd refers to the resin used in the mixture. You can't beat the depth and warm color an alkyd varnish imparts to the wood. It will produce a moderately hard film with excellent water resistance and good scratch, heat, and chemical resistance.

If you're after a "classic" varnish look on a project that won't see heavy wear, this is the one you want. Its clarity also makes it the best choice for a rubbed-out, high-gloss finish.

But one minor drawback is that an alkyd varnish is annoyingly slow drying — 8 to 10 hours to recoat under normal conditions.

Polyurethane Varnish

In the past 20 or 30 years, polyurethane varnish has come to dominate the varnish market. Most of the oil-based varnish products you'll find on the shelf are labeled "poly." The reason is that polyurethane varnish uses a resin that produces a harder, more durable film. A polyurethane has unbeatable moisture, stain, abrasion, and heat resistance. It's a great choice for tabletops, kitchen cabinets, floors, or other "high-traffic" areas.

A polyurethane doesn't have quite the warmth and clarity of an alkyd varnish and if applied too thick, can have a "plastic" look. But its faster drying time (recoat in 4 to 6 hours) and all-around durability are a big plus.

carries the oil and resin onto the surface of the wood.

REACTIVE FINISH. Most finishes dry in one of two ways. An "evaporative" finish, such as shellac or lacquer, dries by simple evaporation of the solvent, leaving a film of resin behind on the wood. Varnish is different. It's referred to as a reactive finish. This means that it actually dries by chemical reaction. As the solvent evaporates, the oil/resin mixture reacts with oxygen in the air to form a hard film (polymerization). So unlike an evaporative finish, a varnish can't simply be "re-dissolved" in its solvent. This is a major reason why varnishes are extremely tough.

FORMULATIONS. The hardness and durability of the film, the drying time, and even the color of a particular varnish is largely derived from the type of oil and resin that it contains and their proportions. A varnish with a high oil to resin ratio (called long oil) forms a softer film than a varnish with a lower ratio (medium or short oil). Polyurethane resins are, by far, the most common type used in today's oil varnishes. But you'll find several other resins that give a varnish different properties.

MAKING A CHOICE. When choosing a varnish for a project, I consider three things: the level of protection and durability I need, the appearance I'm after, and the application method that will work best. If you read through the "short courses" in the boxes below, you'll have all the basic information you need to get started on the perfect varnish finish for your project. W

Spar (Exterior) Varnish

An oil varnish applied to an outdoor project has to withstand extremes of temperature, moisture, and light exposure. For this reason, exterior varnishes (called spar varnish because of its use on boats) are in a class by themselves. These varnishes have two special features. They are long-oil varnishes that form a soft, flexible film. This allows them to hold up to wide variations of temperature, moisture, and wood movement. Second, UV inhibitors are added to make them less sensitive to light degradation.

You'll find traditional spar varnishes that use phenolic resins, however newer types often contain polyurethane resins. The high percentage of oil in spar varnish (usually tung oil) gives it a very strong amber color and also makes it pretty slow drying.

Fast-Dry Varnish

One of the small aggravations of using oil-based varnish is the long wait between coats. The manufacturers have confronted this problem head-on and produced new types of oil varnish that dry much faster. The trick behind this fast-drying feature is the use of faster evaporating solvents such as xylene and benzene. The result is that the recoat time has been shortened to just a couple of hours — comparable to lacquer or shellac. Fast drying varnishes usually contain alkyd resins but polyurethane types are also available.

This feature is a big benefit when you want the look and protection of varnish in a "one-day" finish. But there is a compromise. You won't get quite the same level of protection and you'll find that the odor can be a little stronger.

Easy On — Thin, Thick or Tinted

Protection and appearance aren't the only considerations when choosing a varnish for a project. Convenience can also factor into your decision. The photo at right shows several easy-application varnishes that are available.

WIPING VARNISH. Take an alkyd or poly varnish, dilute it with mineral spirits, and you have a wiping varnish. A wiping varnish has the advantage of almost foolproof application. You wipe or brush on a wet coat, wait for a few minutes, then wipe off the excess. After several coats, you'll have a thin film with a great, "in-the-wood" look.

GEL VARNISH. Gel varnishes take the ease of wipe-on application to the opposite extreme. The gooey, gelled formula allows you to wipe on a finish with virtually no mess or odor. You'll sacrifice a little depth and color with a gel, but you can't beat the simplicity.

TINTED VARNISH. A tinted varnish can save time and effort by combining two steps in the finishing process. It's varnish and stain all in one can. A tinted varnish can very effectively mask color differences in the wood of a project. Just don't apply it too thick or it will hide the figure of the wood as well.

▲ Wiping varnish (left), gel varnish (middle), and tinted varnish (right) make applying a varnish finish a little bit easier.

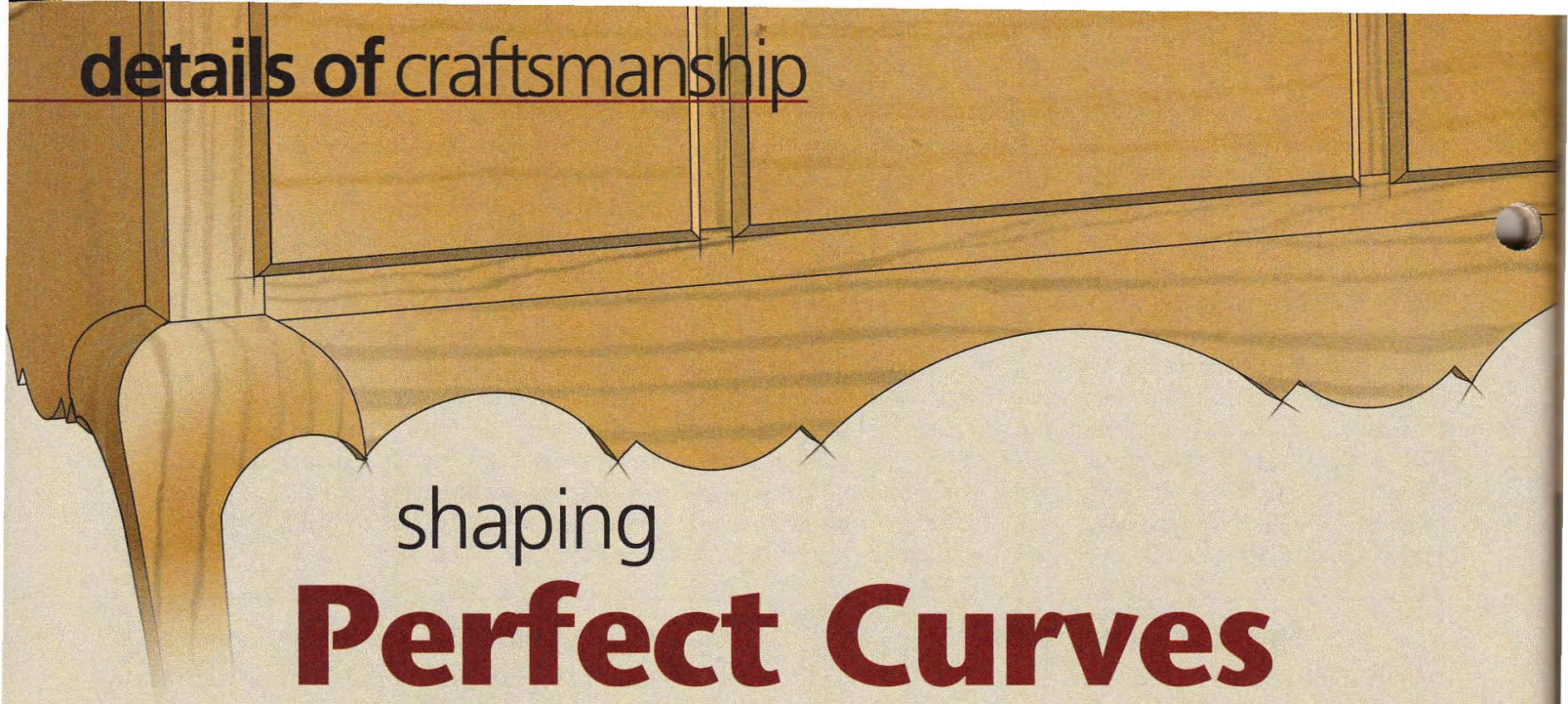

shaping

Perfect Curves

Simple tools and easy-to-master techniques are all it takes to add graceful, eye-catching profiles to your projects.

Nothing adds to a project design and draws admiring attention like a graceful curve. But on the other hand, if the profile isn't well-shaped, you can easily lose the hoped-for effect. For this reason, I've always been a stickler for making the curved edge profiles on my projects crisp, accurate, and smoothly contoured.

There's no mysterious secret to shaping curves. Like a lot of techniques, it's mostly a matter of a little concentration and attention to detail. But there are definitely some tips and techniques that help you get the job done faster and better.

ACCURATE LAYOUT. The first step is a careful layout. The layout is the roadmap that will guide you through the process. If the curve is a simple radius or combination of radii, a compass may be all you need to lay out the shape. But for more complicated profiles, or ones that will be repeated on several pieces, I like to make a pattern. This allows you to refine the shape and get started on the right foot.

A PATTERN. To make the pattern, you want to use a material that's fairly easy to shape but will also hold a good edge. Hardboard or ¼" plywood is a good choice.

When creating a symmetrical profile, a half pattern works best. It takes less effort to make and it ensures perfect symmetry (lower left drawing). I'll often use the same tools and techniques to make the pattern as I'll use on the final product, but the job goes a lot quicker.

BAND SAW. Once the pattern is made and the profile is laid out, cutting it to shape at the band saw comes next. This is really a roughing out stage, but the smoother the cut, the easier the job will go later on. The trick is to make steady, continuous cuts, staying a consistent distance from the layout line, as in Figure 1 below. I like to leave between 1/32" to 1/16" of waste. However, it's better to leave a little more than to wander over the line.

REFINE AND SMOOTH. After cutting the piece to shape, the real work starts. You have two goals: to refine the curve to the desired shape and create a surface ready for finish. The key to this patience.

SIMPLE TOOLS. The first step is to sneak up on the layout line while smoothing the curves. You're going to even out the high and low spots and remove the saw marks. At this stage, my tools are a sanding drum and a spokeshave.

A sanding drum will remove material quickly and works well for shaping inside curves (Figure 2). But I find it difficult to produce a smooth, consistent curve with a

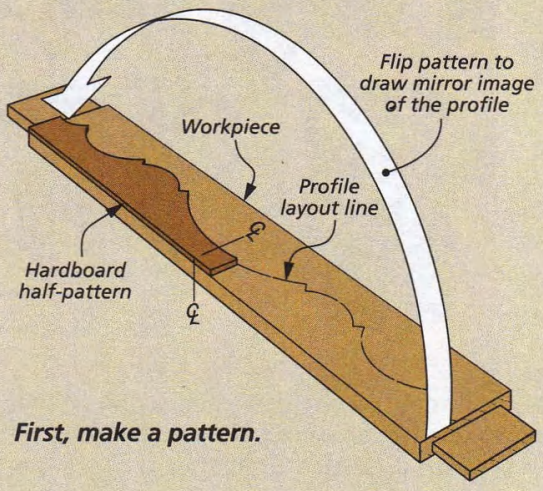

First, make a pattern.

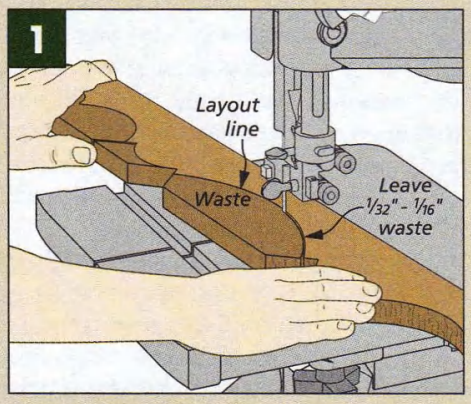

Cut to Shape. *When cutting the profile to shape, try to make smooth, continuous cuts. This will save you cleanup work later.*

sanding drum, so I don't rely on it to produce the finished contour. It just gets me down near the layout line so I can go to the next step.

A spokeshave can handle outside curves. Taking light cuts and always working "downhill" with the grain, shave away the saw marks and close in on the layout line (Figure 2). You won't end up with a finished surface, but you can get the hard work out of the way.

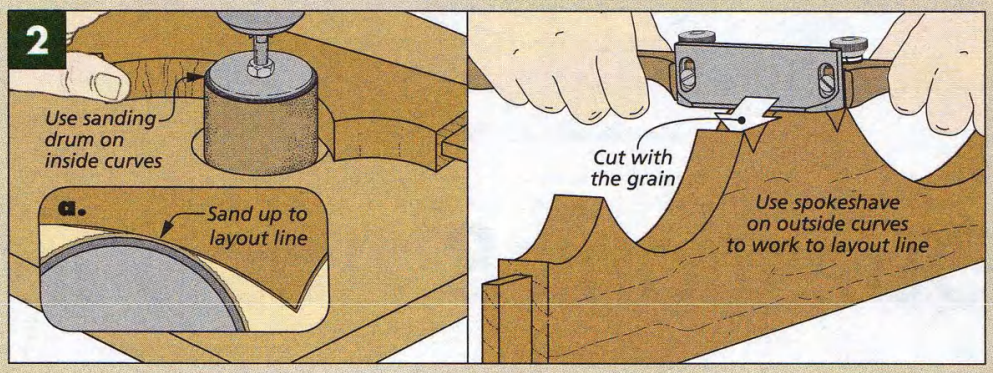

I use both my eyes and fingers to judge my progress. Watch the layout line to establish the shape and dimension of the profiles. Your fingers can be the best judge of the smoothness of the curve. When you run your fingers along the surface, you'll feel any irregularities.

SMOOTHING THE SURFACE. Next, I switch to a half-round cabinet file to further refine the curves. Its light cut will leave a smooth surface and allow you to slowly fine-tune the shape of the curve.

I make use of both the flat and the round side of the file. It works best to skew the file at an angle to the edge (Figure 3). This increases the cutting surface in contact with the wood and helps create a smoother contour. And when you can, use long strokes. Finally, try to focus on keeping the file square to the surface to avoid roughing up or rounding the sharp edges.

CORNERS. Creating clean, sharp inside and outside corners is important to the appearance. The only trick to outside corners is a light touch with the file. Carefully feather into the strokes to avoid rounding over or chipping the sharp points you're creating.

Inside corners need a different approach. The file won't give you a sharp profile and you risk marring or gouging the intersecting edge. The solution is to pick up a chisel and carefully pare away the wood that can't be safely reached with the file, as shown in Figure 4. The chisel will give you a cleaner corner and allow you to smoothly transition into the main curve.

FINAL SMOOTHING. When the contours feel smooth and the profile looks good, the final step is to remove the file scratches and create a surface ready for finish. The box below highlights the steps.

First, I use a hand scraper to quickly clean up most of the remaining tool marks. Then I switch to hard-faced sanding blocks and fine sandpaper to complete the job. For sanding inside curves, you can make a block with a curved face. A flat block will do the job on outside curves. Again, try not to round over the edges. Just sand until the surface is smooth and scratch-free.

The nice thing about this process is that it doesn't require any great skill or practice, just attention to detail. And when the gracefully curved lines create the effect you planned for, you'll be glad you took the time to get it right. W

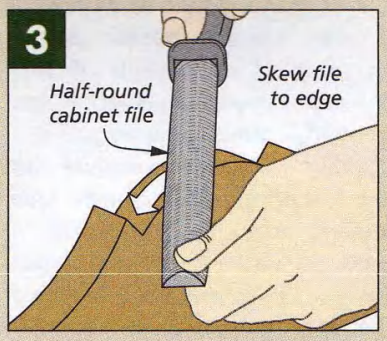

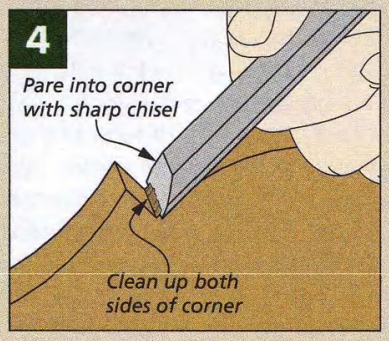

How-To: Final Smoothing

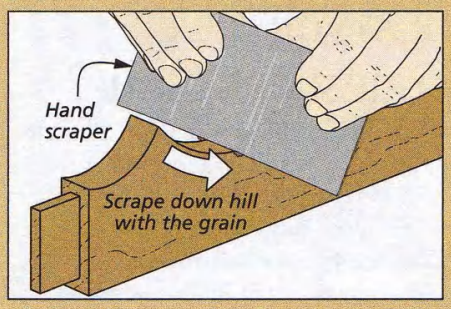

Scrape First. *Use a hand scraper to quickly remove most of the tool marks and create a surface ready for sanding.*

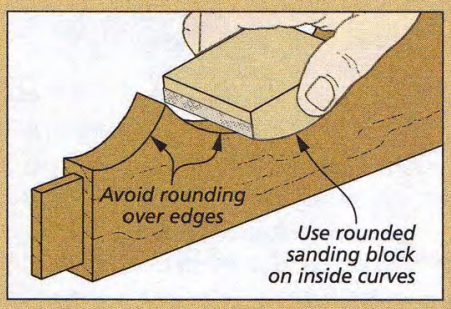

Inside Curves. *I like to use a rounded, unpadded sanding block to do the finish sanding on the inside curves.*

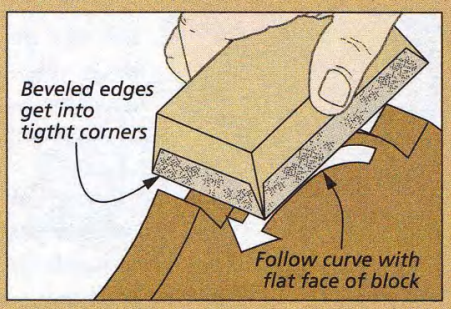

Beveled Block. *A flat sanding block with beveled edges allows you to follow the outside curves and get into sharp corners.*

Questions & Answers

Air Drying Lumber

Q ***I recently had some logs sawn into boards. What's the best way to dry them?***

Jack Vreeland
Portland, Maine

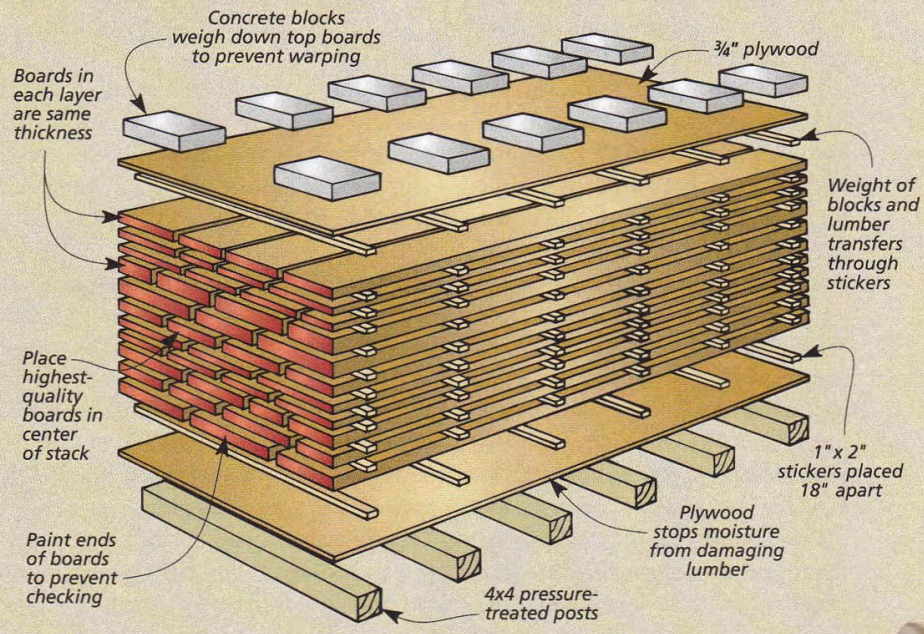

A With freshly cut lumber, as much as half the weight is water. That water, usually listed as a percentage of the weight, is referred to as the moisture content of the milled wood. Before the wood can be used, most of the water must be removed, bringing the moisture content down below 10%.

AIR DRYING. You can air dry your own lumber. In fact, there can even be some advantages to this. The photos at left show two walnut boards. The top board was air dried, the lower one kiln dried. As you can see, the air dried piece retains the warm, natural red tints of the walnut.

▲ Air drying (top photo) preserves the natural color of the walnut.

The illustration above shows an air-drying setup. Start by constructing a flat base on level ground. In this case, some 4 x 4 posts covered with plywood. It's important to keep the lumber off the ground to prevent moisture from wicking into the boards.

STICKERS. Before stacking the lumber, you'll need some stickers (narrow strips of wood) to place between each layer. The stickers act as spacers, allowing air to circulate between the layers and release the moisture.

BUILD THE STACK. Now all you need to do is start stacking the boards. You can dry boards of different thicknesses in your stack, but make sure each individual layer is the same thickness.

Another thing to keep in mind as you're stacking is to try and keep your best boards toward the center. Boards on the outside may dry more quickly and will be prone to checking and warping. The interior of the stack will dry at a slower, more consistent rate.

ADD A TOP. After placing the final layer, you can add a plywood top to keep rain or snow off the stack. By weighing the top down with a few concrete blocks, you help prevent the boards from warping as they dry.

PAINT THE ENDS. The last step is to paint the ends of the boards. Since water escapes more quickly from the end grain than from the face of the boards, a coat of latex paint will slow down evaporation and prevent checking.

Now all you need to do is give nature some time. The rule of thumb for drying time is roughly one year for each inch of thickness. But this can vary depending on the temperature and humidity in your area. W

Do you have any questions for us?

If you have a question related to woodworking techniques, tools, finishing, hardware, or accessories, we'd like to hear from you.

Just write down your question and mail it to us: Woodsmith Q&A, 2200 Grand Avenue, Des Moines, Iowa 50312. Or you can email us the question at: woodsmith@woodsmith.com.

Please include your full name, address, and daytime telephone number in case we have questions.

Sources

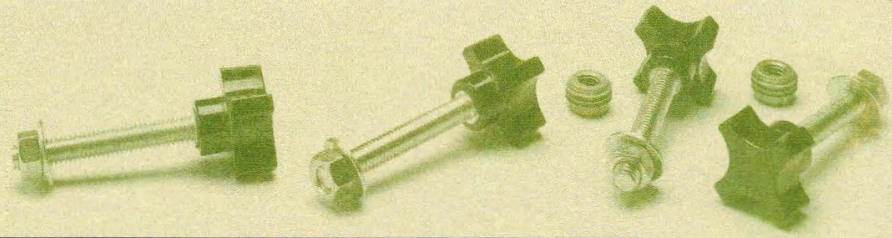

MALLETS

Mallets are an invaluable tool in the shop. The ones shown in the article on page 8 are just a sampling of the variety offered by several companies. To find one that fits your needs, contact *Tools for Working Wood* or *The Best Things*. You'll find contact information listed in the right margin.

BAND SAW UPGRADES

The upgrades for your band saw shown in the article on page 10 are readily available from woodworking stores. Since most items will be specific to your saw brand and model, you may need to contact the manufacturer for some upgrades. Several other suppliers are listed in the right margin.

MORTISE PAL

The *Mortise Pal* featured on page 14 is only available from the manufacturer, *R.G. Jig Co.* The company recommends using a 5/8" O.D. guide bushing (147934) available from *Woodcraft*. This part includes the centering pin.

CHARGING STATION

The hardware for the charging station on page 20 is available from most hardware stores or home centers. You'll want to choose an electrical power strip that will hold as many transformers as you need before you start the project. A good source for these is an office supply store. The finish used to stain the dark portion of the station was *General Finishes' Gel Stain* in java.

OUTDOOR BENCH

The outdoor bench on page 24 was finished with *Penofin Ultra Premium Red Label Wood Finish* in sable. It's available from the *Woodsmith Store*.

WINE SERVER

The hardware for the wine server on page 30 was purchased from two companies. The false hinges (MS-41) and the pull (MS-13) are available from *Horton Brasses*. The rare-earth magnet (99K31.01), magnet cup (99K32.51), and washer (#99K32.61) came from *Lee Valley* (see margin). The server was finished with *Varathane Wood Stain* in Early American.

SPECIALIZED ROUTER BITS

Several companies make the router bits featured in the article on page 40. *Amana Tool* makes the tambour bit set (54314). It's available at *Toolstoday.com*. The straight bits for undersized plywood measuring 15/64" (90330), 31/64" (90528), and 23/32" (90627) and the locking miter bit (22627) were purchased from *Rockler*. The three-piece glue-joint bit set (8357) and box joint bit (7860), came from *MLCS Woodworking*. *The Woodsmith Store* sells the *Amana* dado clean-out bit (45489), the T-slot cutter (45660) and the downshear flush trim bit (47138).

OIL VARNISH

Oil-based or alkyd varnishes, like the ones on page 46, can be harder to find than polyurethane varnishes. But there are several companies that make them. To find them in your area, check with a local paint store to see what brands are available. Some products may need to be special ordered.

McCloskey's makes an alkyd varnish called *Heirloom Varnish*. It's available *at Woodworker's Supply*. *Old Masters* makes *Super Varnish*. It can be ordered from the *Woodsmith Store*. W

Online Customer Service

Click on *Magazine Customer Service* at **www.woodsmith.com**

- Access your account status
- Change your mailing or email address
- Pay your bill
- Renew your subscription
- Tell us if you've missed an issue
- Find out if your payment has been received

MAIL ORDER SOURCES

Project supplies may be ordered from the following companies:

Woodsmith Store
800-444-7527
Band Saw Upgrades, Dado Clean-Out Bit, Downshear Flush Trim Bit, Old Masters Varnish, T-Slot Cutter

Horton Brass
800-754-9127
horton-brasses.com
False Hinge, Pull

Lee Valley
800-871-8158
leevalley.com
Band Saw Upgrades, Magnet Cup, Rare-Earth Magnet, Washers

MLCS Woodworking
800-533-9298
mlcswoodworking.com
Box Joint Bit, Collet Extensions, Glue-Joint Bit Set

R.G. Jig Co.
619-459-7951
mortisepal.com
Mortise Pal

Rockler
800-279-4441
rockler.com
Band Saw Upgrades, Locking Miter Bit, Straight Bits for Plywood

Tools Today
888-699-3939
toolstoday.com
Amana Tambour Bit Set

Woodcraft
800-225-1153
woodcraft.com
Band Saw Upgrades, Guide Bushing

Woodworker's Supply
800-645-9292
woodworker.com
Bandsaw Upgrades, McCloskey Varnish

Tools for Working Wood
800-426-4613
toolsforworkingwood.com
Mallets

The Best Things
800-884-1373
thebestthings.com
Mallets

Woodsmith®
HARDBOUND VOLUMES

This set includes seven hardbound volumes of ***Woodsmith*** *(Volumes 22 through 28). Each volume includes a year of issues, plus a table of contents and a handy index.*
Buy them for $29.95 each. Or get the seven-volume set for $157.25 and ***SAVE OVER $50*** *on the whole set plus*
FREE SHIPPING on your entire order!
(Offer expires 12/31/08)

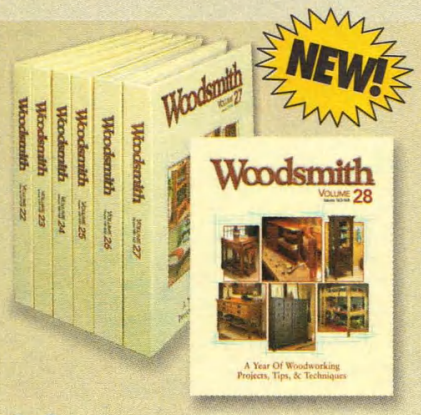

Go to www.Woodsmith.com
or Call 1-800-444-7527 Today to Order Yours!

looking inside
Final Details

▲ *Charging Station.* No more searching for a misplaced cell phone or MP3 player. All it takes is a day or two in the shop and you'll have a stylish place to keep all your electronic gadgets handy and fully charged. The plans begin on page 18.

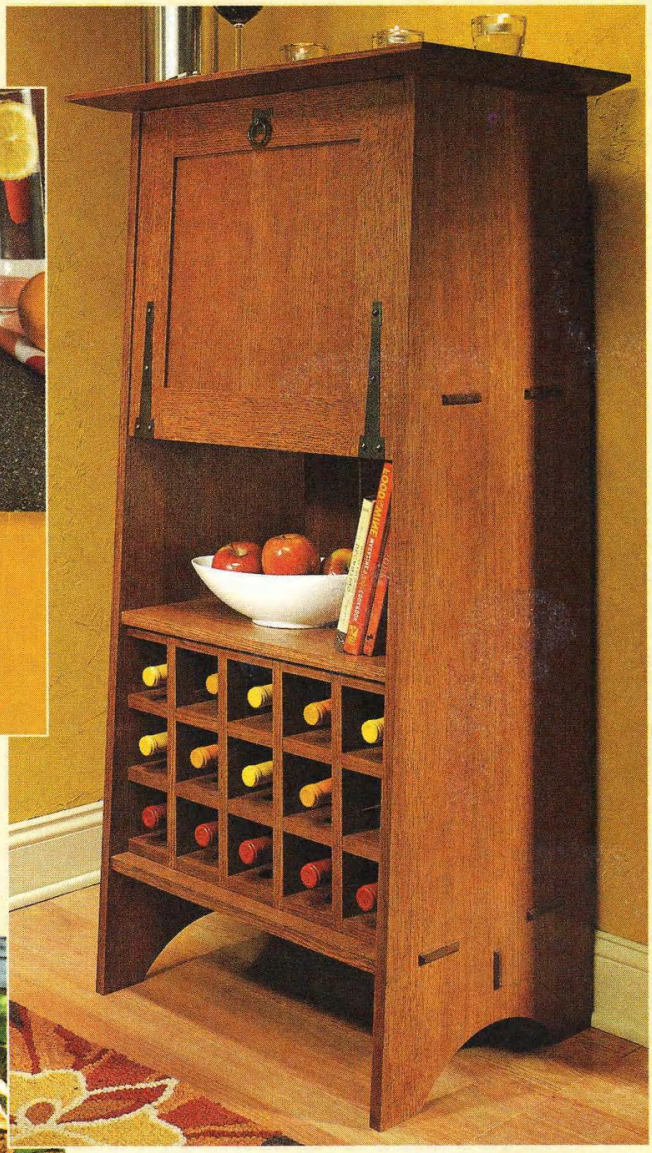

▲ *Wine Server.* This beautiful oak cabinet is more than just an impressive way to store your wine collection. Open the drop-front to create a spacious serving surface and reveal the handy wineglass storage. You'll find the details on page 30.

◄ *Garden Bench.* Attractive, sturdy, and best of all, easy to build, this project will create the perfect relaxing spot in the garden. Turn to page 22 to get started.